ELECTRICAL SYMBOLS

LEGEND (LIGHTING & POWER PLANS)

- LUMINAIRE, POLE MOUNTED (LETTER INDICATED TYPE)
- PC — FLOODLIGHT LUMINAIRE, WALL MOUNTED (PC = PHOTOCELL)
- HID LUMINAIRE, WALL MOUNTED
- 8FT. FLUOR LUMINAIRE, (LETTER DENOTES TYPE)
- 8FT. FLUOR LUMINAIRE ON EMERGENCY CIRCUIT (ALL TYPES)
- 8FT. SINGLE FLUOR LUMINAIRE, (LETTER DENOTES TYPE)
- 4FT. FLUOR LUMINAIRE, (LETTER DENOTES TYPE)
- 4FT. FLUOR LUMINAIRE ON EMERGENCY CIRCUIT (ALL TYPES)
- 4FT. SINGLE FLUOR LUMINAIRE, (LETTER DENOTES TYPE)
- EXIT LIGHT – SEE SCHEDULE
- EMERGENCY LIGHT SINGLE FIXTURE
- EMERGENCY LIGHT FIXTURE
- W/P — DUPLEX 120V RECEPTACLE (W/P = WEATHERPROOF) 48" A.F.F., 12" ABOVE COUNTER TOP
- (4) — QUAD 120V RECEPTACLE 48" A.F.F., 18" A.F.F. IN OFFICES
- DUPLEX RECEPTACLE (CEILING BOX)
- 208/220V RECEPTACLE–48" A.F.F.
- SINGLE 120V RECEPTACLE–48" A.F.F.
- POWER RECEPTACLE (600V)–36" A.F.F.
- POWER RECEPTACLE (250V)–36" A.F.F.
- SPECIAL RECEPTACLE–36" A.F.F.
- PHOTO–ELECTRIC CELL–FIELD LOCATE
- C — CLOCK RECEPTACLE–FIELD LOCATE
- S — SINGLE POLE SWITCH–48" A.F.F.
- S_3 — THREE–WAY SWITCH–48" A.F.F.
- S_4 — FOUR–WAY SWITCH–48" A.F.F.
- S_D — DIMMER SWITCH–48" A.F.F.
- S_P — LOW VOLTAGE SWITCH–48" A.F.F.
- INSTRUMENT
- R — INDICATING LAMP (COLOR INDICATED BY LETTER)
- ST — SHUNT TRIP COIL
- A — AMMETER
- AS — AMMETER SWITCH
- V — VOLTMETER
- VS — VOLTMETER SWITCH
- COMMUNICATION OUTLET 48" A.F.F., 18" A.F.F. IN OFFICES
- TELEPHONE OUTLET 48" A.F.F., 18" A.F.F. IN OFFICES
- F — MANUAL FIRE ALARM PULL STATION–48" A.F.F.
- HORN–FIELD LOCATE
- R — STROBE (COLOR INDICATED BY LETTER)–FIELD LOCATE
- GROUND ROD
- GROUNDING POINT
- AIRCRAFT GROUND RECEPTACLES
- PORTABLE EQUIPMENT GROUND RECEPTACLES
- LIGHTING ARRESTER (AIR TERMINAL)
- GROUNDING BAR

- POWER PANEL
- LIGHTING PANEL
- DISTRIBUTION PANEL
- MOTOR CONTROL CENTER
- EQUIPMENT ENCLOSURE
- CONDUIT ROUTED EXPOSED OR CONCEALED ABOVE GRADE.
- CONDUIT ROUTED BELOW GRADE.
- CONDUIT OR CIRCUIT CONTINUED FURTHER ON IN RUN.
- CONDUIT TURNING UP.
- CONDUIT TURNING DOWN.
- CONDUIT TERMINATED AND CAPPED.
- GROUND CABLE
- "T" CONDUIT UP
- "T" CONDUIT DOWN
- A–11,13 — HOME RUN TO PANEL, ARROWHEADS INDICATE NO. OF CIRCUITS (ie: CKT. NOS. 11 & 13, TO PANEL "A".)
- T–1 — HOME RUN TO TELEPHONE PANEL T–1
- HH — HANDHOLE
- MH — MANHOLE (VAULT)
- DISCONNECT SWITCH
- COMBINATION MOTOR STARTER & DISCONNECT SWITCH
- MOTOR STARTER
- S — SOFT START MOTOR STARTER
- S — COMBINATION SOFT START MOTOR STARTER & DISCONNECT SWITCH
- PUSHBUTTON CONTROL STATION
- TB — TERMINAL BOX
- J — JUNCTION BOX OR PULL BOX
- M — MOTOR
- T — THERMOSTAT–48" A.F.F.
- T–H — ELECTRIC UNIT HEATER
- T–AC — AIR CONDITIONER
- T — TRANSFORMER/PAD
- WITHDRAWABLE CONTACTS
- CABLE TERMINATION
- FUSE
- FUSED DISCONNECT
- NON FUSED DISCONNECT
- 52 — CIRCUIT BREAKER
- MOLDED CASE CIRCUIT BREAKER
- SURGE ARRESTER
- TRANSFORMER
- CURRENT TRANSFORMER
- —X—X— FENCE
- SCADA OUTPUT
- SCADA INPUT

NOTES:

1.) SYMBOLS AND ABBREVIATIONS SHOWN ARE CONSIDERED TO BE CONSTRUCTION STANDARDS. THIS PROJECT MAY NOT USE ALL OF THEM.

GENERAL NOTES

1. REFERENCE ARCHITECTURAL DRAWINGS FOR LOCATION OF ALL FIXTURES AND EQUIPMENT.
2. PROVIDE AND LOCATE OUTLETS, WIRING AND CONTROLS, AS INDICATED OR REQUIRED FOR EQUIPMENT FURNISHED UNDER OTHER SECTIONS OR CONTRACTS PER EQUIPMENT SUPPLIER'S REQUIREMENTS. CONNECT TO ALL EQUIPMENT AND ASSOCIATED CONTROLS, UNLESS OTHERWISE DIRECTED. VERIFY LOCATIONS, RATINGS, VOLTAGES, CONTROL WIRING, CONTROL DEVICES TO BE FURNISHED AND/OR INSTALLED WITH TRADE DRAWINGS AND SPECIFICATIONS. REFER TO EQUIPMENT OR SYSTEM SPECIFICATIONS REQUIRING ELECTRICAL WORK TO DETERMINE SCOPE OF WORK REQUIRED.
3. IN SOUND INSULATED FLOORS, CEILINGS AND WALL PARTITIONS:
   1. SEPARATE ELECTRICAL AND SIGNAL OUTLET BOXES LOCATED ON OPPOSITE WALL SURFACES HORIZONTALLY BY 12" AND SEPARATE BY A STUD OR SOLID BLOCKING.
   2. SEAL BACK AND SIDES OF BOXES WITH 1/8" RESILIENT SEALANT BACKED BY A MINIMUM OF 2" THICK MINERAL FIBER INSULATION.
   3. ISOLATE ALL CONDUIT WITHIN THE SOUND RATED FLOOR–CEILING ASSEMBLY FROM THE BUILDING CONSTRUCTION AT POINTS OF SUPPORT OR CONTACT BY MEANS OF APPROVED RESILIENT SLEEVES, MOUNTS OR UNDERLAYMENTS 1/4" THICK.
4. PROVIDE BARRIERS IN ALL SWITCH BOXES, OUTLET BOXES AND CABINETS THAT HAVE EMERGENCY AND NORMAL POWER SOURCES.
5. IN MECHANICAL EQUIPMENT ROOMS, COORDINATE THE LOCATION OF THE LIGHTING FIXTURE WITH THE EQUIPMENT AND DUCT LAYOUTS, WHERE FIXTURES ARE REQUIRED TO BE PENDANT MOUNTED. REFER TO SPECIFICATIONS FOR SEISMIC BRACING REQUIREMENTS.

ELECTRICAL ABBREVIATIONS

A	AMP OR AMPERE
AF	AMP FRAME
A.F.F.	ABOVE FINISH FLOOR
AIC	AMPS INTERRUPTING CAPACITY
AL	ALUMINUM
AT	AMP TRIP
ATS	AUTOMATIC TRANSFER SWITCH
ATSI	ADVANCED TELEMETRY SYSTEMS, INC.
AWG	AMERICAN WIRE GAUGE
BLDG.	BUILDING
B.O.C.	BOTTOM OF CONDUIT
B.O.F.	BOTTOM OF FIXTURE
C	CONDUIT
CB	CIRCUIT BREAKER
CKT	CIRCUIT
CONT.	CONTACTOR
CT'S	CURRENT TRANSFORMER
CNTL	CONTROL
CR	CONTROL RELAY
CU	COPPER
DB	DIRECT BURIED
DEPT.	DEPARTMENT
DIA.	DIAMETER
DPST	DOUBLE POLE SINGLE THROW
DWG	DRAWING
E	EAST
EF	EXHAUST FAN
EL.	ELEVATION
ELEC.	ELECTRICAL
ETM	ELASPED TIME METER
EUSERC	ELECTRIC UTILITY SERVICE EQUIPMENT REQUIREMENTS COMMITTEE
F.C.	FOOT CANDLE
FC	FLOW CONTROLLER
FLA	FULL LOAD AMPERES
FLUOR	FLUORESCENT
FVNR	FULL–VOLTAGE NON–REVERSING
FVR	FULL–VOLTAGE REVERSING
FWD	FORWARD
GEN	GENERATOR
GFI	GROUND FAULT INTERUPTER
GND	GROUND
HH	HANDHOLE
HID	HIGH INTENSITY DISCHARGE
HP	HORSE POWER
HPS	HIGH PRESSURE SODIUM
H.V.	HIGH VOLTAGE
HVAC	HEATING, VENTALATION & AIR CONDITIONING
KCM	THOUSAND CIRCULAR–MILS
KVA	KILOVOLT AMPERE
KW	KILOWATT
LSH	LEVEL SWITCH HIGH
LSHH	LEVEL SWITCH HIGH/HIGH
LSL	LEVEL SWITCH LOW
LSLL	LEVEL SWITCH LOW/LOW
LTG	LIGHTING
LTS	LIGHTS
L.V.	LOW VOLTAGE
MAX	MAXIMUM
MCC	MOTOR CONTROL CENTER
MCP	MOTOR CIRCUIT PROTECTOR
MH	MANHOLE
MIN	MINIMUM
MTR	MOTOR
MV	MOTORIZED VALVE
N	NORTH
N.C.	NORMALLY CLOSED
NEC	NATIONAL ELECTRICAL CODE
NEMA	NATIONAL ELECTRICAL MANUFACTURER'S ASSOC.
N.I.C.	NOT IN CONTRACT
N.O.	NORMALLY OPEN
NTS	NOT TO SCALE
OIT	OPERATOR INTERFACE TERMINAL
OL	OVERLOAD
P	POLE
PB	PULLBOX
PC	PHOTO–CELL
PE	PHOTO ELECTRIC CONTROLLER
PF	POWER FACTOR
PNL	PANEL
PSH/L	PRESSURE SWITCH HIGH/LOW
PT'S	POTENTIAL TRANSFORMERS
PWR	POWER
RECEPT	RECEPTACLE
REV	REVERSE
RM	ROOM
RMS	ROOT MEAN SQUARE
RTM	RUN TIME METER
RTU	REMOTE TELEMETRY UNIT
SCADA	SUPERVISORY CONTROL AND DATA ACTUATION
SD	SMOKE DETECTOR
SHT	SHEET
SO.	SOUTH
SPST	SINGLE POLE SINGLE THROW
SSRVS	SOLID STATE REDUCED VOLTAGE STARTER
SV	SOLENOID VALVE
SW	SWITCH
TB	TERMINAL BOX
TC	TIMECLOCK
TDOE	TIME DELAY ON ENERGIZE
TR	TIMING RELAY
TSH	TEMPERATURE SWITCH HIGH
TYP	TYPICAL
UG	UNDERGROUND
U/G	UNDERGROUND
UH	UNIT HEATER
V	VOLT
VA	VOLT–AMPS
VDU	VIDEO DISPLAY UNIT
W	WATTS
W	WEST
WH	WATER HEATER
WHM	WATT HOUR METER
W/O	WITHOUT
W/P	WEATHER–PROOF
W/PW	WITH PULLWIRE
XFMR	TRANSFORMER

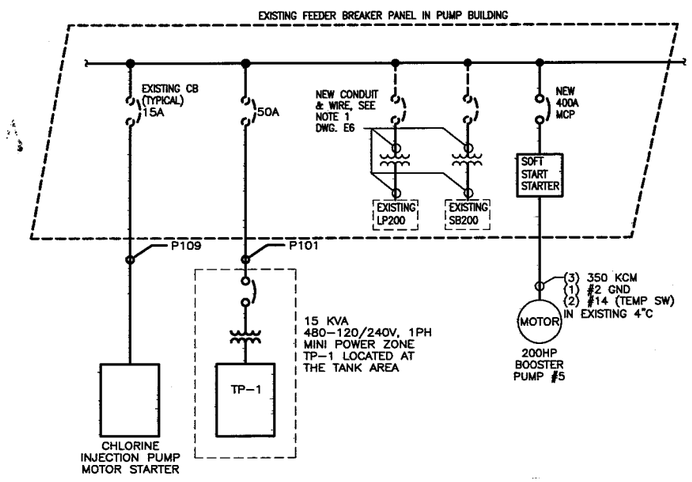

PARTIAL ONE-LINE DIAGRAM

NTS

INDEX TO DRAWINGS

SHEET NO.	DESCRIPTION
19 th STREET	
E1	ABBREVIATIONS, SYMBOLS AND ONE LINE DIAGRAM
E2	ELECTRICAL SITE PLAN AND CONDUIT LAYOUT
E3	ELECTRICAL CONDUIT LAYOUT
E4	CONTROL ELEMENTARY DIAGRAMS
E5	CONTROL PANEL LAYOUT AND LOGIC DIAGRAM
E6	CB PANEL AND CONDUIT & CONDUCTOR SCHEDULES
ENCANTO PARK BOOSTER PUMP STATION	
E11	ONE LINE DIAGRAM AND SITE LAYOUT
E12	POWER PLAN AND DETAILS
E13	CONTROL ELEMENTARY DIAGRAMS
E14	ELECTRICAL DETAILS

IF SHEET IS LESS THAN 24" x 36" IT IS A REDUCED PRINT. SCALE REDUCED ACCORDINGLY.

RECORD DRAWINGS

NO.	DATE	DESCRIPTION	NO.	DATE	DESCRIPTION
1	11/05	RECORD REVISION			

REVISIONS

DESIGNED BY: MDW
DRAWN BY: BJR
CHECKED BY: GJ

URS
2870 Gateway Oaks Drive, Suite 300
Sacramento, California 95833-3200
(916) 929-2346
FAX: (916) 929-7263

REGISTERED PROFESSIONAL ENGINEER JAMES E. COOK No. E012723 Exp. 6/30/08 ELECTRICAL STATE OF CALIFORNIA

MUSCOY OU REMEDIAL DESIGN
19th STREET PLANT & ENCANTO PARK PUMPING PLANT
NEWMARK GROUNDWATER CONTAMINATION SUPERFUND SITE

ABBREVIATIONS AND SYMBOLS
ONE-LINE DIAGRAM

SCALE:	DATE:	DWG. FILE:	SHEET NO.
AS NOTED	AUG 14, 2003	E1.DWG	E1

H:\CADD\Current\ENV-INFRA\Muscoy\Final Design_As Builts\E1.dwg User:msteffinger Plotted:May 24, 2006 – 2:12pm Last Save:May 24, 2006 – 2:11pm

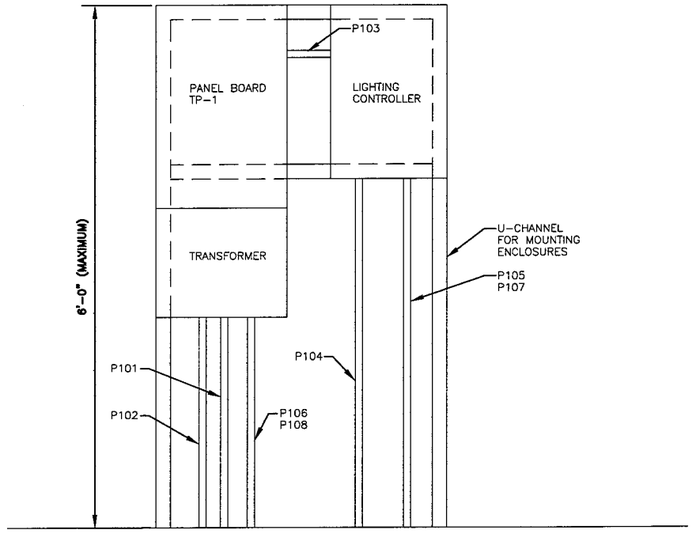

CIRCUIT BREAKER PANEL TP-1 & LIGHTING CONTROLLER LAYOUT (A)

N.T.S.

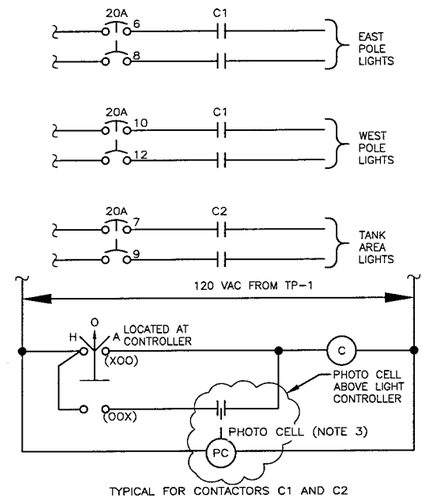

LIGHTING CONTROLS (B)

N.T.S.

LUMINAIRE SCHEDULE

FIXTURE	DESCRIPTION
A	POLE FIXTURE, CORROSION RESISTANT, DIE CAST LOW COPPER ALUMINUM ALLOY HOUSING. OVATE REFRACTOR, DROP LENS GLASS. COLOR GRAY, 240V BALLAST FOR 400 WATT HIGH PRESSURE SODIUM. 25-FT POLE WITH ROUND TAPERED ALUMINUM WITH 8-FT MOUNTING ARM. POLE COLOR BRUSHED ALUMINUM, ARM COLOR SATIN ALUMINUM.
B	POST MOUNTED LUMINAIRE SUITABLE FOR WET LOCATIONS, PAINT GREY WITH LEXAN REFRACTOR. 240 VOLT BALLAST FOR 150 WATT HPS LAMP GE P17M WITH 18 FT MOUNTING POLE OR EQUAL.

NOTES:

1. REFER TO CIVIL LAYOUT DRAWING FOR EXISTING UNDERGROUND CONDUITS AND PIPES.
2. FIELD CONFIRM LOCATION OF EXISTING DEVICES.
3. PHOTO CELLS ARE LOCATED AT LIGHT CONTROLLER AS SHOWN ON THE DRAWING. CONTRACTOR SHALL MOUNT UNIT AND ADJUST FOR LIGHTING CONDITIONS.
4. SEE SHEET No. E14 FOR POLE FOUNDATION DETAIL.

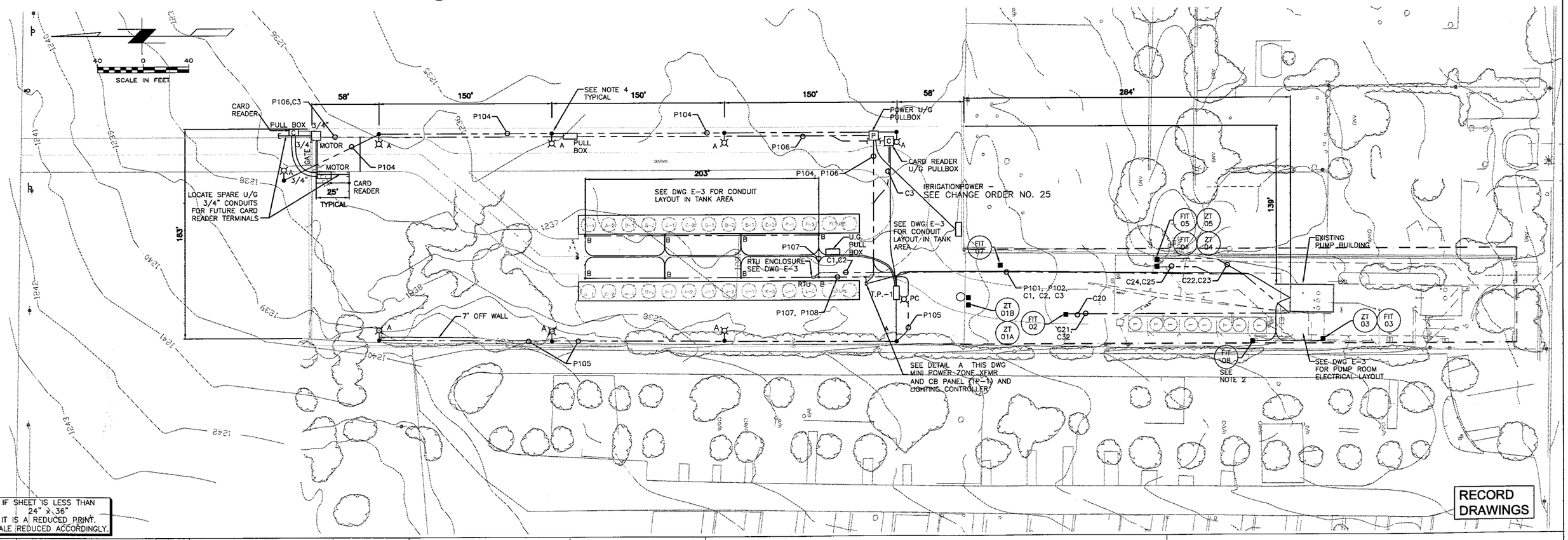

IF SHEET IS LESS THAN 24" x 36" IT IS A REDUCED PRINT. SCALE REDUCED ACCORDINGLY.

RECORD DRAWINGS

NO.	DATE	DESCRIPTION	NO.	DATE	DESCRIPTION
1	11/05	RECORD REVISION			

REVISIONS

DESIGNED BY: MDW
DRAWN BY: BJR
CHECKED BY: GJ

URS
2870 Gateway Oaks Drive, Suite 300
Sacramento, California 95833-3300
(916) 929-2546
FAX: (916) 929-7263

REGISTERED PROFESSIONAL ENGINEER JAMES E. COOPER No. E012723 Exp. 6/30/08 ELECTRICAL STATE OF CALIFORNIA

MUSCOY OU REMEDIAL DESIGN
19th STREET PLANT & ENCANTO PARK PUMPING PLANT
NEWMARK GROUNDWATER CONTAMINATION SUPERFUND SITE

ELECTRICAL SITE PLAN AND CONDUIT LAYOUT

SCALE:	DATE:	DWG. FILE:	SHEET NO.
AS NOTED	AUG 14, 2003	E2.DWG	E2

H:\CADD\Current\ENV-INFRA\Muscoy\Final Design_As Builts\E2.dwg User:msteffinger Plotted:May 25, 2006 - 8:47am Last Saved:May 25, 2006 - 8:47am

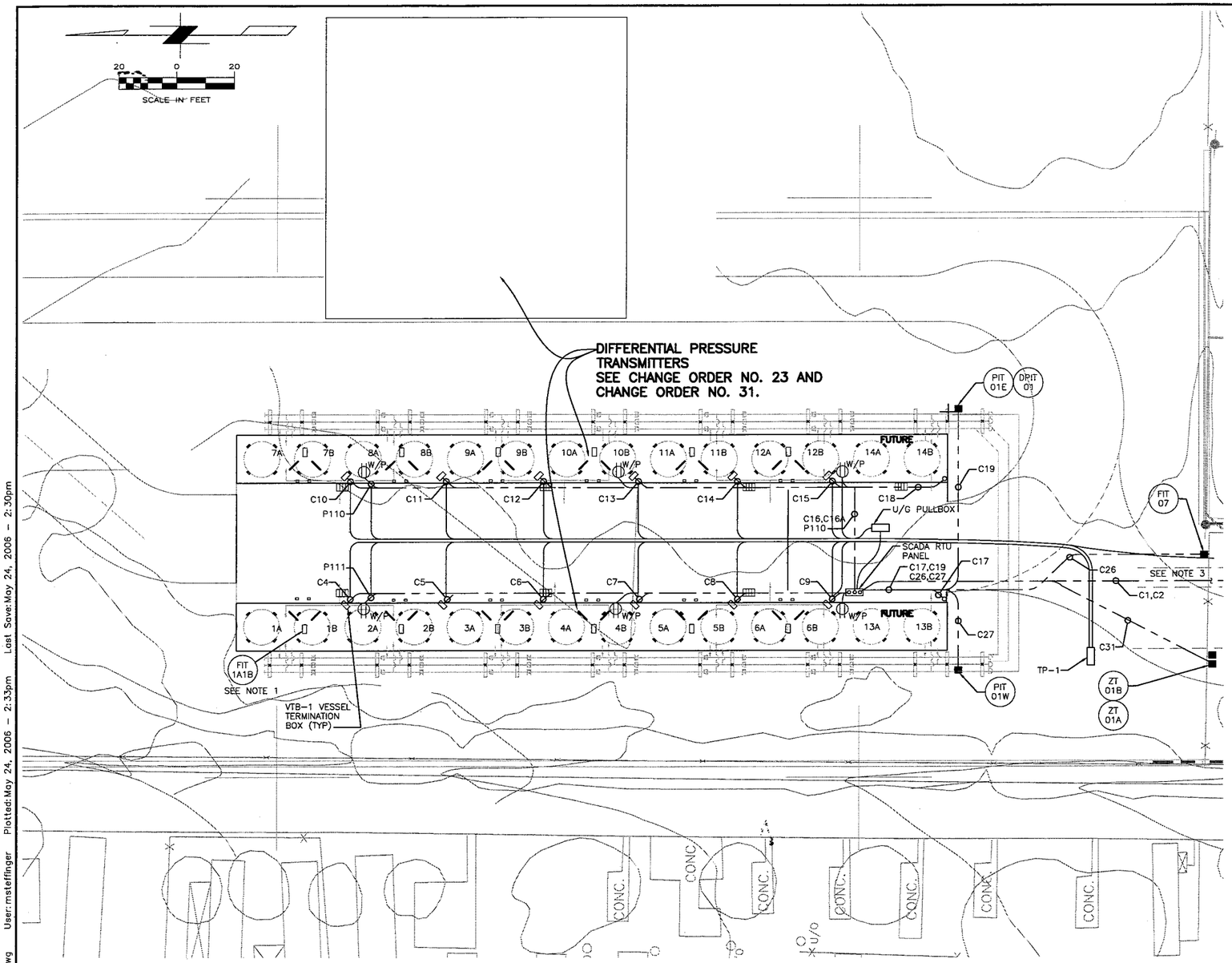

YARD AREA CONTROL CONDUIT LAYOUT

1"=20'-0"

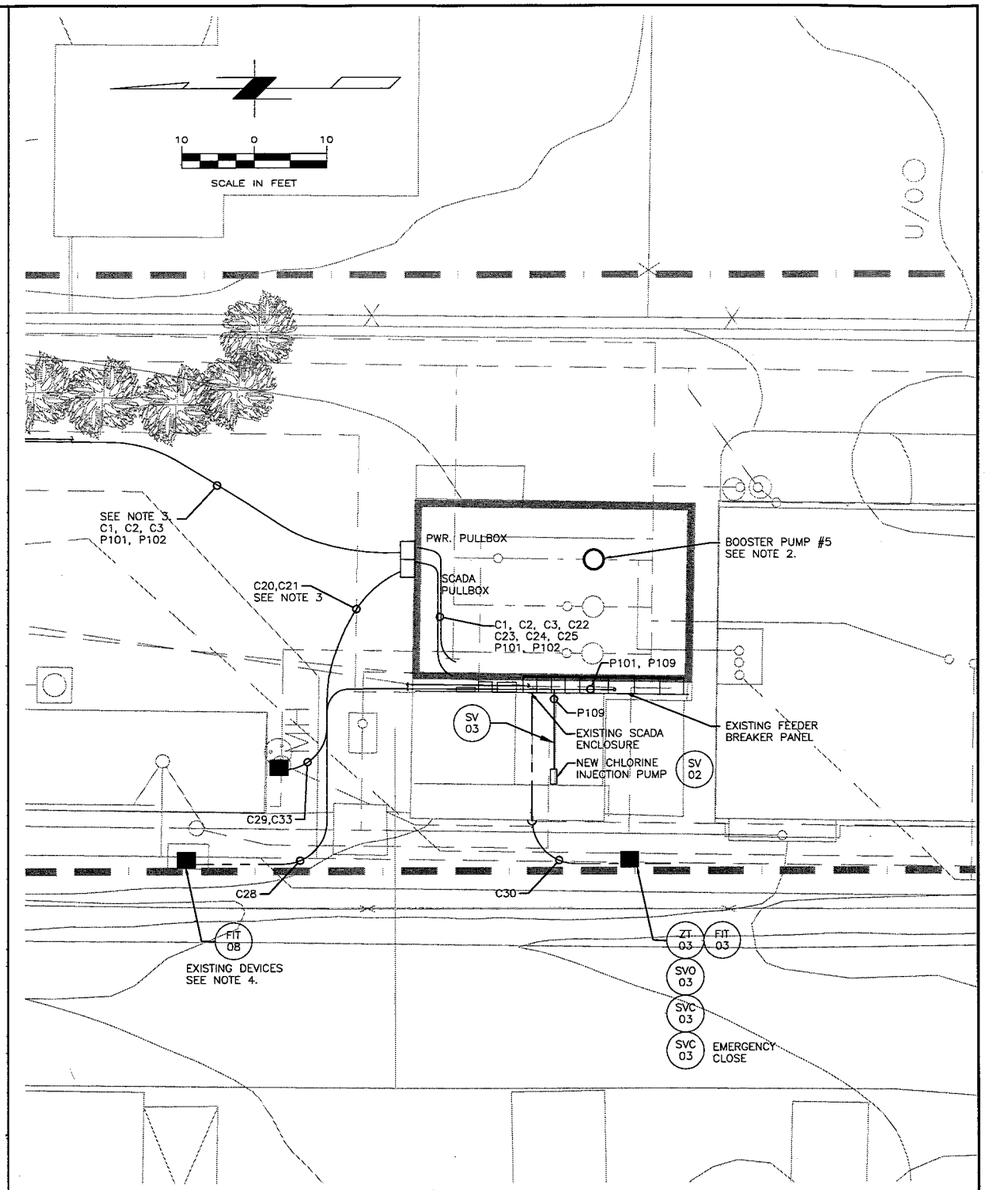

EXISTING PUMP BUILDING CONDUIT LAYOUT

1"=10'-0"

NOTES:

1. INSTRUMENTS ARE TYPICAL FOR EACH PAIR OF TANKS. CONTRACTOR SHALL ROUTE CONDUITS AND SIGNAL CABLES FROM EACH INSTRUMENT TO THE VESSEL TERMINATION BOX (VTB-X) FROM EACH TERMINATION BOX THE SIGNAL CABLES SHALL BE ROUTED TO THE SCADA RTU ENCLOSURE AS SHOWN.
2. NEW BOOSTER PUMP #5 SHALL BE INSTALLED AT THIS LOCATION, SEE DWG. E6 FOR DETAIL PANEL AND CONDUIT LAYOUT.
3. REFER TO DRAWING E2 FOR CONDUITS ENTERING AND EXITING THIS AREA.
4. FIELD LOCATE FIT-03 EXISTING DEVICES. RUN NEW CONDUITS FROM THEIR EXISTING LOCATIONS TO THE SCADA ENCLOSURE. PULL NEW WIRE AND CABLES FOR CONTROL AND SIGNALS.

RECORD DRAWINGS

IF SHEET IS LESS THAN 24" x 36" IT IS A REDUCED PRINT. SCALE REDUCED ACCORDINGLY.

NO.	DATE	DESCRIPTION	NO.	DATE	DESCRIPTION
1	11/05	RECORD REVISION			

REVISIONS

DESIGNED BY: MDW
DRAWN BY: BJR
CHECKED BY: GJ

URS
2870 Gateway Oaks Drive, Suite 300
Sacramento, California 95833-3300
(916) 929-2546
FAX: (916) 929-7293

REGISTERED PROFESSIONAL ENGINEER JAMES E. COOK No. E012723 Exp. 6/30/08 ELECTRICAL STATE OF CALIFORNIA

MUSCOY OU REMEDIAL DESIGN
19th STREET PLANT & ENCANTO PARK PUMPING PLANT
NEWMARK GROUNDWATER CONTAMINATION SUPERFUND SITE

ELECTRICAL CONDUIT LAYOUT

SCALE:	DATE:	DWG. FILE:	SHEET NO.
AS NOTED	AUG 14, 2003	E3.DWG	E3

H:\CADD\Current\ENV-INFRA\Muscoy\Final Design_As Builts\E3.dwg User:msteffinger Plotted:May 24, 2006 - 2:33pm Last Save:May 24, 2006 - 2:30pm

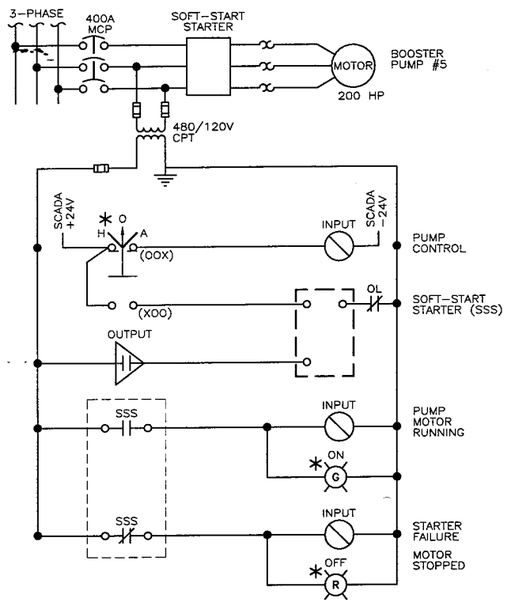

* = DEVICE ON MCC STARTER

BOOSTER PUMP #5 MOTOR CONTROL

N.T.S.

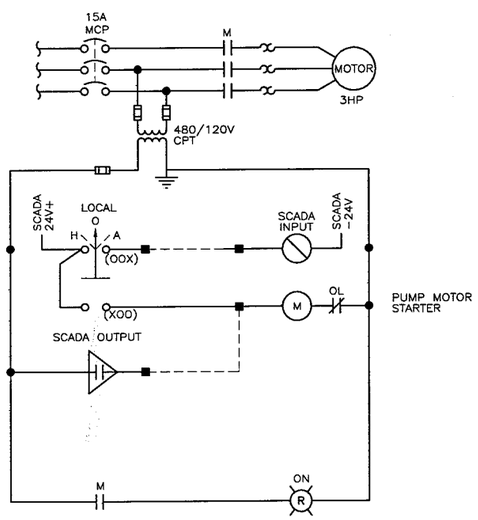

IF SHEET IS LESS THAN 24" x 36" IT IS A REDUCED PRINT. SCALE REDUCED ACCORDINGLY.

CHLORINE INJECTION PUMP

N.T.S.

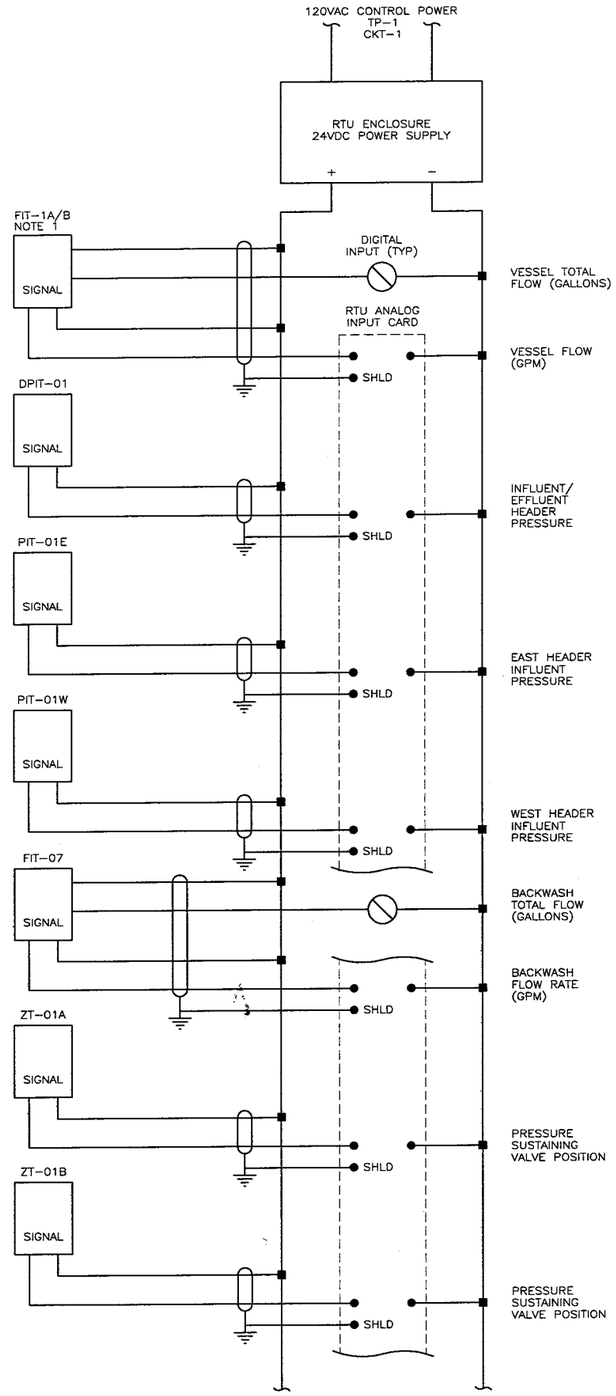

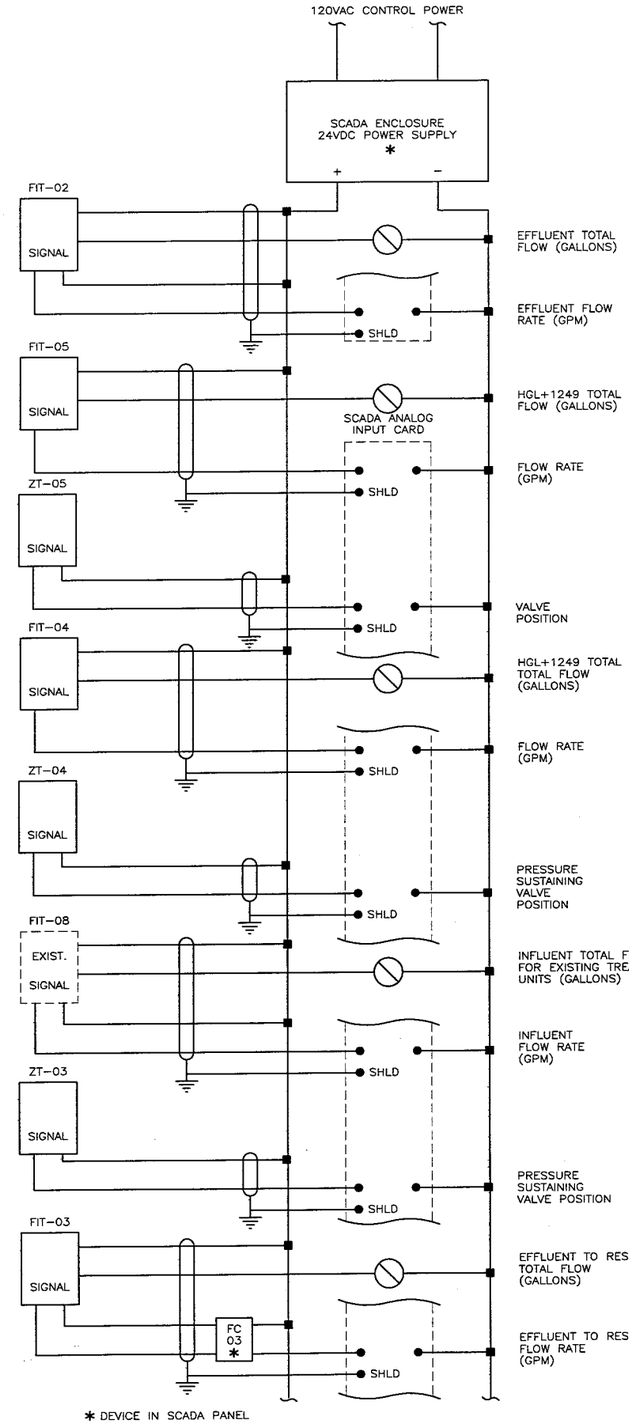

* DEVICE IN SCADA PANEL

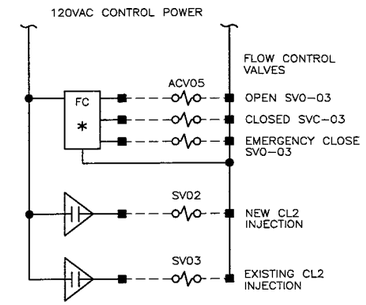

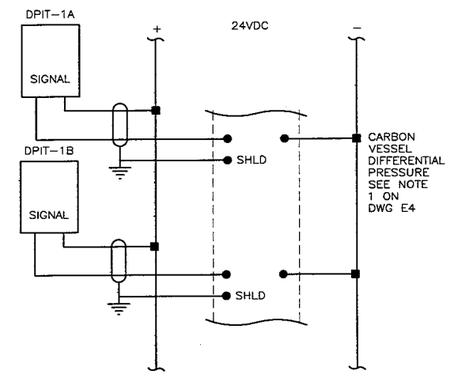

SEE CHANGE ORDER NO. 23

DPIT CONTROL ELEMENTARY DIAGRAM SKETCH

N.T.S.

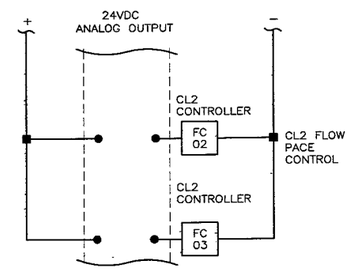

NOTES:

1. INSTRUMENTATION SHOWN FOR VESSEL PAIR 1A AND 1B, TYPICAL FOR 12 VESSEL PAIRS.

RECORD DRAWINGS

NO.	DATE	DESCRIPTION	NO.	DATE	DESCRIPTION
1	11/05	RECORD REVISION			

REVISIONS

DESIGNED BY: MDW
DRAWN BY: BJR
CHECKED BY: GJ

URS
2870 Gateway Oaks Drive, Suite 300
Sacramento, California 95833-3200
(916) 929-2345
FAX: (916) 929-7263

REGISTERED PROFESSIONAL ENGINEER JAMES E. COOKE No. E012723 Exp. 6/30/06 ELECTRICAL STATE OF CALIFORNIA

MUSCOY OU REMEDIAL DESIGN
19th STREET PLANT & ENCANTO PARK PUMPING PLANT
NEWMARK GROUNDWATER CONTAMINATION SUPERFUND SITE

CONTROL ELEMENTARY DIAGRAMS

SCALE:	DATE:	DWG. FILE:	SHEET NO.
AS NOTED	AUG 14, 2003	E4.DWG	E4

H:\CADD\Current\ENV-INFRA\Muscoy\Final Design_As Builts\E4.dwg User:msteffinger Plotted:May 25, 2006 - 8:48am Last Save:May 25, 2006 - 8:48am

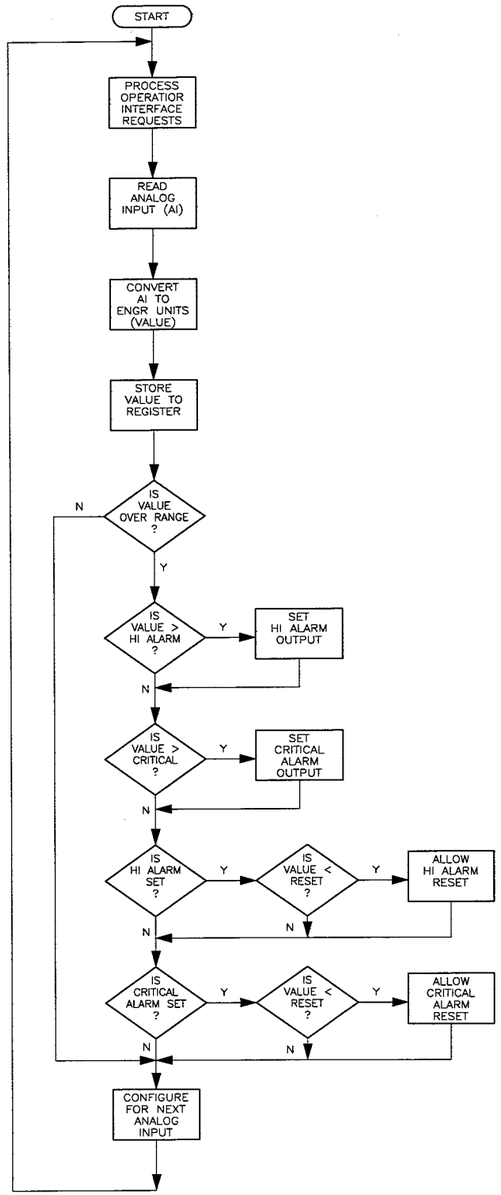

ANALOG SIGNAL LOGIC DIAGRAM
N.T.S.

SCADA PROGRAM REQUIREMENTS:

P1 THE PROGRAM SHALL INCLUDE AN AVERAGING ALGORITHM FOR THE ANALOG INPUTS. THE PARAMETERS FOR THE AVERAGING ALGORITHM SHALL BE ADJUSTABLE (THROUGH PROGRAM MODIFICATIONS – NOT THROUGH OIT). AS AN ALTERNATIVE, THE AVERAGING CAN BE CONFIGURED WITH THE HARDWARE AS A PART OF THE ANALOG INPUT CARDS.

P2 THE PROGRAM SHALL TEST ANALOG INPUT REASONABILITY (I.E. 4ma < AI< 20ma). ANALOG INPUTS WHICH FAIL REASONABILITY SHALL BE ALARMED WITH MESSAGE TO THE OIT.

OPERATOR INTERFACE REQUIREMENTS:

01. SELECTIVELY VIEW DIFFERENTIAL PRESSURE VALUES
02. SELECTIVELY VIEW FLOW VALUES
03. CHANGE DIFFERENTIAL PRESSURE HIGH ALARM SETPOINT
04. CHANGE DIFFERENTIAL PRESSURE CRITICAL ALARM SETPOINT
05. CHANGE DIFFERENTIAL PRESSURE HIGH ALARM RESET POINT
06. CHANGE DIFFERENTIAL PRESSURE CRITICAL ALARM RESET POINT
07. INITIATE ALARM ACKNOWLEDGE
08. INITIATE ALARM RESET

SCADA ALARM FUNCTION AND SEQUENCE

A1 WHEN ALARM CONDITION EXISTS, APPROPRIATE ALARM WINDOW SHALL FLASH A DISPLAY ON THE VDU.

A2 WHEN ALARM IS ACKNOWLEDGED (OIT FUNCTION KEY), FLASHING DISPLAY SHALL BE REPLACED WITH STEADY ON DISPLAY. IF ADDITIONAL ALARMS OCCUR AFTER ACKNOWLEDGE FUNCTION HAS BEEN INITIATED, THESE SHALL FLASH UNTIL SUBSEQUENTLY ACKNOWLEDGED.

A3 WHEN ALARM IS RESET (OIT FUNCTION KEY), ALL INDICATIONS NOT CURRENTLY IN ALARM CONDITION SHALL BE EXTINGUISHED. INDICATIONS REMAINING IN ALARM CONDITION SHALL CONTINUE TO ILLUMINATE.

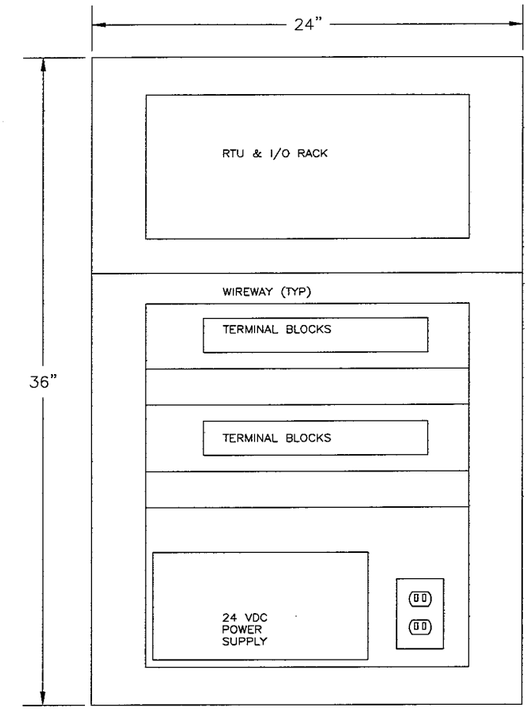

RTU CONTROL PANEL LAYOUT (DOOR REMOVED)
N.T.S.

MATERIAL LIST

HOFFMAN OR EQUAL	24"x36"x12" NEMA 4 ENCLOSURE WITH BACKPANEL AND PADLOCK ASSEMBLY.
ATSI– KINGFISHER	SCADA RTU MODEL 91200 COMPATABLE WITH EXISTING SYSTEM
ACOPIAN OR EQUAL	24VDC POWER SUPPLY RATED FOR 10 AMP OUTPUT AT 55°C

IF SHEET IS LESS THAN 24" x 36" IT IS A REDUCED PRINT. SCALE REDUCED ACCORDINGLY.

RECORD DRAWINGS

NO.	DATE	DESCRIPTION	NO.	DATE	DESCRIPTION
1	11/05	RECORD REVISION			

REVISIONS

DESIGNED BY: MDW
DRAWN BY: BJR
CHECKED BY: GJ

URS
2870 Gateway Oaks Drive, Suite 300
Sacramento, California 95833-3500
(916) 929-2346
FAX: (916) 928-7293

REGISTERED PROFESSIONAL ENGINEER JAMES E. COOK No. E012723 Exp. 6/30/08 ELECTRICAL STATE OF CALIFORNIA

MUSCOY OU REMEDIAL DESIGN
19th STREET PLANT & ENCANTO PARK PUMPING PLANT
NEWMARK GROUNDWATER CONTAMINATION SUPERFUND SITE

CONTROL PANEL LAYOUT AND LOGIC DIAGRAM

SCALE:	DATE:	DWG. FILE:	SHEET NO.
AS NOTED	AUG 14, 2003	E5.DWG	E5

H:\CADD\Current\ENV-INFRA\Muscoy\Final Design_As Builts\E5.dwg User:mstefinger Plotted:May 24, 2006 – 3:08pm Last Save:May 24, 2006 – 3:08pm

PANEL SCHEDULE

NO. TP-1 | LOCATION: TANK AREA | SERVING: N. SITE AREA

120/240 VOLTS 1 Ø 3 WIRE
80 AMP MAIN LUGS

N A B

CIRCUIT DESCRIPTION	VA	AMP			AMP	VA	CIRCUIT DESCRIPTION
RTU CONTROLLER POWER I/O PANEL RECPT.	500	20	1	2	20	750	TANK AREA POLE LIGHTS (TYPE-B)
AREA RECEPTACLES (E)	720	20	3	4	20	750	TANK AREA POLE LIGHTS (TYPE-B)
AREA RECEPTACLES (W)	720	20	5	6	20	1250	PERIMETER POLE LIGHTS (TYPE-A) EAST
I/O PANEL RECEPTACLE RTU CONTROLLER POWER	180	20	7	8	20	1250	PERIMETER POLE LIGHTS (TYPE-A) EAST
NORTH GATE MOTOR	840	20	9	10	20	1000	PERIMETER POLE LIGHTS (TYPE-A) WEST
NORTH GATE MOTOR	840	20	11	12	20	1000	PERIMETER POLE LIGHTS (TYPE-A) WEST
IRRIGATION			13	14			LIGHTING CONTROL POWER
SPACE			15	16			SPACE
SPACE			17	18			SPACE
			NEUT.				

CONNECTED LOAD: 9620 VA 40 AMPS | DEMAND: 70% | DEMAND LOAD: 6734 VA 28 AMPS

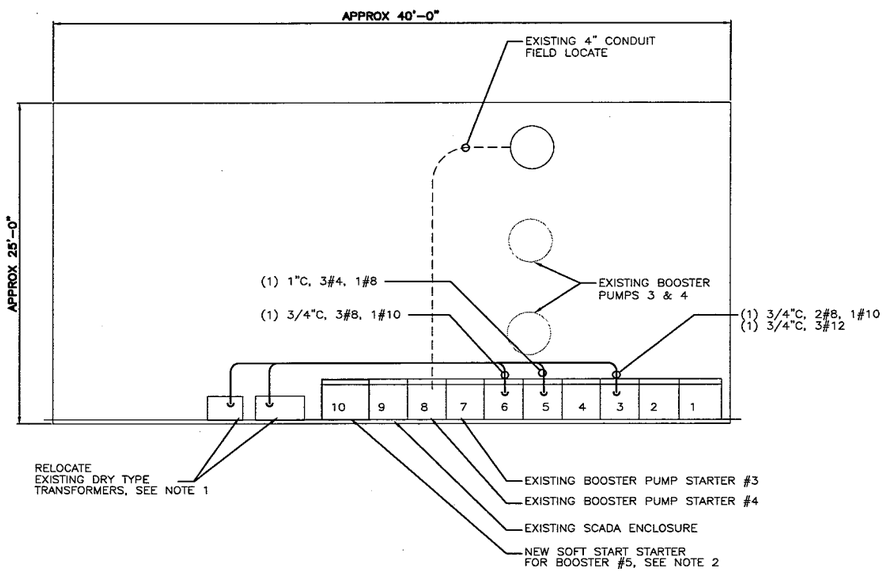

PARTIAL PUMP ROOM LAYOUT
N.T.S.

SEE CHANGE ORDER NO. 23

NOTES:

1. CONTRACTOR SHALL RELOCATE EXISTING 15 KVA AND 7 ½ KVA FLOOR MOUNTED DRY TYPE TRANSFORMERS. PROVIDE AND INSTALL NEW CONDUITS AND WIRE FOR PRIMARY FROM SECTION 3 AND SECONDARIES TO SECTION 5 AND 6 IN MAIN PANELBOARD.
2. CONTRACTOR SHALL PROVIDE AND INSTALL A NEW 90" HIGH SECTION WITH A SOFT START STARTER FOR 200 HP BOOSTER PUMP #5. MATCH EXISTING SIEMENS SERIES FCI ENCLOSURE.

CONDUIT AND CONDUCTOR SCHEDULE

CONDUIT I.D. NO.	CONDUIT SIZE	CONDUCTOR QTY	CONDUCTOR SIZE	CONDUCTOR TYPE	SERVICE OR CIRCUIT NO.	RUN FROM	RUN TO	REMARKS
P101	1"	3	4	THWN	POWER NEUT	EXISTING FEEDER PANEL	TP-1	
		1	8	THWN	GND			
P102	1"	–	–	–	SPARE	PUMP BUILDING	TP-1	
P103	3/4"	5	12	THWN	POWER GND	TP-1	LIGHTING CONTROLLER	
P104	3/4"	3	8	THWN	POWER GND	LIGHTING CONTROLLER	EAST PERIMETER LIGHT POLES	
P105	3/4"	3 4	8 12	THWN THWN	POWER GND PC CONTROL	LIGHTING CONTROLLER	WEST PERIMETER LIGHT POLES	
P106	3/4"	4	10	THWN	POWER NEUT GND	TP-1	NORTH GATE MOTOR	
P107	3/4"	3 4	10 12	THWN THWN	POWER GND PC CONTROL	LIGHTING CONTROLLER	TANK AREA LIGHT POLES	
P108	3/4"	3	12	THWN	POWER NEUT GND	TP-1	RTU	CONTROLLER POWER
P109	3/4" PVC	4	12	THWN	POWER GND	EXISTING FEEDER PANEL	CHLORINE PUMP	
P110	3/4"	3	12	THWN	TP-1-3	TP-1	RECEPTACLES	
P111	3/4"	3	12	THWN	TP-1-5	TP-1	RECEPTACLES	
C1	1"				LOCAL NETWORK	SCADA PANEL	RTU PANEL	
C2	1"				SPARE	PUMP BUILDING	RTU PANEL	
C3	1"				CARD READER	SCADA PANEL	NORTH GATE J-BOX	VIA PULLBOX
C4	1"	1 2	4/C#18 2/C#18	SHLD	SIGNAL	RTU PANEL	VTB-1 SPARE	
C4A	1"	1	4/C#18	SHLD	SIGNAL	VTB-1	FIT-1A/B	
C4B	3/4"	1 1	2/C#18 2/C#18	SHLD	SIGNAL	VTB-1 VTB-1	DPIT-1B SPARE	ROUTE TO C4C
C4C	3/4"	1	2/C#18	SHLD	SIGNAL	DPIT-1B	DPIT-1A	
C5	1"	1 2	4/C#18 2/C#18	SHLD	SIGNAL	RTU PANEL	VTB-2 SPARE	
C5A	1"	1	4/C#18	SHLD	SIGNAL	VTB-2	FIT-2A/B	
C5B	3/4"	1 1	2/C#18 2/C#18	SHLD	SIGNAL	VTB-2 VTB-2	DPIT-2B SPARE	ROUTE TO C5C
C5C	3/4"	1	2/C#18	SHLD	SIGNAL	DPIT-2B	DPIT-2A	
C6	1"	1 2	4/C#18 2/C#18	SHLD	SIGNAL	RTU PANEL	VTB-3 SPARE	
C6A	1"	1	4/C#18	SHLD	SIGNAL	VTB-3	FIT-3A/B	
C6B	3/4"	1 1	2/C#18 2/C#18	SHLD	SIGNAL	VTB-3 VTB-3	DPIT-3B SPARE	ROUTE TO C6C
C6C	3/4"	1	2/C#18	SHLD	SIGNAL	DPIT-3B	DPIT-3A	
C7	1"	1 2	4/C#18 2/C#18	SHLD	SIGNAL	RTU PANEL	VTB-4 SPARE	
C7A	1"	1	4/C#18	SHLD	SIGNAL	VTB-4	FIT-4A/B	
C7B	3/4"	1 1	2/C#18 2/C#18	SHLD	SIGNAL	VTB-4 VTB-4	DPIT-4B SPARE	ROUTE TO C7C
C7C	3/4"	1	2/C#18	SHLD	SIGNAL	DPIT-4B	DPIT-4A	
C8	1"	1 2	4/C#18 2/C#18	SHLD	SIGNAL	RTU PANEL	VTB-5 SPARE	
C8A	1"	1	4/C#18	SHLD	SIGNAL	VTB-5	FIT-5A/B	
C8B	3/4"	1 1	2/C#18 2/C#18	SHLD	SIGNAL	VTB-5 VTB-5	DPIT-5B SPARE	ROUTE TO C8C
C8C	3/4"	1	2/C#18	SHLD	SIGNAL	DPIT-5B	DPIT-5A	
C9	1"	1 2	2/C#18	SHLD	SIGNAL	RTU PANEL	VTB-6 SPARE	
C9A	1"	1	4/C#18	SHLD	SIGNAL	VTB-6	FIT-6A/B	
C9B	3/4"	1 1	2/C#18 2/C#18	SHLD	SIGNAL	VTB-6 VTB-6	DPIT-6B SPARE	ROUTE TO C9C
C9C	3/4"	1	2/C#18	SHLD	SIGNAL	DPIT-6B	DPIT-6A	

CONDUIT AND CONDUCTOR SCHEDULE

CONDUIT I.D. NO.	CONDUIT SIZE	CONDUCTOR QTY	CONDUCTOR SIZE	CONDUCTOR TYPE	SERVICE OR CIRCUIT NO.	RUN FROM	RUN TO	REMARKS
C10	1"	1 2	4/C#18 2/C#18	SHLD	SIGNAL	RTU PANEL	VTB-7 SPARE	VIA C16
C10A	1"	1	4/C#18	SHLD	SIGNAL	VTB-7	FIT-7A/B	
C10B	3/4"	1 1	2/C#18 2/C#18	SHLD	SIGNAL	VTB-7 VTB-7	DPIT-7B SPARE	ROUTE TO C10C
C10C	3/4"	1	2/C#18	SHLD	SIGNAL	DPIT-7B	DPIT-7A	
C11	1"	1 2	4/C#18 2/C#18	SHLD	SIGNAL	RTU PANEL	VTB-8 SPARE	VIA C16
C11A	1"	1	4/C#18	SHLD	SIGNAL	VTB-8	FIT-8A/B	
C11B	3/4"	1 1	2/C#18 2/C#18	SHLD	SIGNAL	VTB-8 VTB-8	DPIT-8B SPARE	ROUTE TO C11C
C11C	3/4"	1	2/C#18	SHLD	SIGNAL	DPIT-8B	DPIT-8A	
C12	1"	1 2	4/C#18 2/C#18	SHLD	SIGNAL	RTU PANEL	VTB-9 SPARE	VIA C16
C12A	1"	1	4/C#18	SHLD	SIGNAL	VTB-9	FIT-9A/B	
C12B	3/4"	1 1	2/C#18 2/C#18	SHLD	SIGNAL	VTB-9 VTB-9	DPIT-9B SPARE	ROUTE TO C12C
C12C	3/4"	1	2/C#18	SHLD	SIGNAL	DPIT-9B	DPIT-9A	
C13	1"	1 2	4/C#18 2/C#18	SHLD	SIGNAL	RTU PANEL	VTB-10 SPARE	VIA C16
C13A	1"	1	4/C#18	SHLD	SIGNAL	VTB-10	FIT-10A/B	
C13B	3/4"	1 1	2/C#18 2/C#18	SHLD	SIGNAL	VTB-10 VTB-10	DPIT-10B SPARE	ROUTE TO C13C
C13C	3/4"	1	2/C#18	SHLD	SIGNAL	DPIT-10B	DPIT-10A	
C14	1"	1 2	4/C#18 2/C#18	SHLD	SIGNAL	RTU PANEL	VTB-11 SPARE	VIA C16
C14A	1"	1	4/C#18	SHLD	SIGNAL	VTB-11	FIT-11A/B	
C14B	3/4"	1 1	2/C#18 2/C#18	SHLD	SIGNAL	VTB-11	DPIT-11B SPARE	ROUTE TO C14C
C14C	3/4"	1	2/C#18	SHLD	SIGNAL	DPIT-11B	DPIT-11A	
C15	1"	1 2	4/C#18 2/C#18	SHLD	SIGNAL	RTU PANEL	VTB-12 SPARE	VIA C16
C15A	1"	1	4/C#18	SHLD	SIGNAL	VTB-12	FIT-12A/B	
C15B	3/4"	1 1	2/C#18 2/C#18	SHLD	SIGNAL	VTB-12 VTB-12	DPIT-12B SPARE	ROUTE TO C15C
C15C	3/4"	1	2/C#18	SHLD	SIGNAL	DPIT-12B	DPIT-12A	
C16	2"	6	4/C#18	SHLD	SIGNAL	RTU PANEL	U/G PULLBOX	
		2	4/C#18	SHLD	SPARE			
C16A	2"	12	2/C#18	SHLD	SPARE			CONTINUE TO VTB-X
		4	2/C#18	SHLD	SPARE			
C17	1"				SPARE	RTU PANEL	VESSEL 13 AREA	FOR FUTURE CONTROLS
C18	1"				SPARE	U/G PULLBOX	VESSEL 14 AREA	FOR FUTURE CONTROLS
C19	3/4"	1 1	2/C#18 2/C#18	SHLD SHLD	SIGNAL SIGNAL	RTU PANEL	PIT-01E DPIT-01	
C20	3/4" PVC	1	4/C#18	SHLD	SIGNAL	SCADA PANEL	FIT-02	
C21	3/4" PVC	2	#14	THWN	CONTROL	SCADA PANEL	SV-02	
C22	1 1/2"	1 1	4/C#18 2/C#18	SHLD SHLD	SIGNAL SIGNAL	SCADA PANEL	FIT-05 ZT-05	ON FCV-05
C23	3/4"	4 2	#14 #14	THWN THWN	CONTROL SPARE	SCADA PANEL	FCV-05	
C24	1 1/2"	1 1	4/C#18 2/C#18	SHLD SHLD	SIGNAL SIGNAL	SCADA PANEL	FIT-06 ZT-06	ON FCV-06
C25	3/4"	4 2	#14 #14	THWN THWN	CONTROL SPARE	SCADA PANEL	FCV-06	
C26	3/4"	1	4/C#18	SHLD	SIGNAL	RTU PANEL	FIT-07	
C27	3/4"	1	2/C#18	SHLD	SIGNAL	RTU PANEL	PIT-01W	
C28	3/4"	1	4/C#18	SHLD	SIGNAL	SCADA PANEL	FIT-03	
C29	3/4"	2 2	#14 #14	THWN	CONTROL SPARE	SCADA PANEL	SV-03/04	
C30	1"	1 1	2/C#18 4/C#18	SHLD SHLD	SIGNAL SHLD	SCADA PANEL	ZT-03 FIT-04	
C31	1"	1 1	2/C#18 2/C#18	SHLD SHLD	SIGNAL SIGNAL	RTU PANEL	ZT-01A ZT-01B	
C32	1 1/4"	6	2/C#18	SHLD	SPARE SIGNAL	SCADA PANEL	SV-02	FUTURE INSTRUMENTS
C33	1 1/4"	6	2/C#18	SHLD	SPARE SIGNAL	SCADA PANEL	SV-03/04	FUTURE INSTRUMENTS

RECORD DRAWINGS

IF SHEET IS LESS THAN 24" x 36" IT IS A REDUCED PRINT. SCALE REDUCED ACCORDINGLY.

NO.	DATE	DESCRIPTION	NO.	DATE	DESCRIPTION
1	11/05	RECORD REVISION			

REVISIONS

DESIGNED BY: MDW
DRAWN BY: BJR
CHECKED BY: GJ

URS
2870 Gateway Oaks Drive, Suite 300
Sacramento, California 95833-3505
(916) 929-2345
FAX: (916) 929-7283

REGISTERED PROFESSIONAL ENGINEER JAMES E. COOK No. E012723 Exp. 6/30/08 ELECTRICAL STATE OF CALIFORNIA

MUSCOY OU REMEDIAL DESIGN
19th STREET PLANT & ENCANTO PARK PUMPING PLANT
NEWMARK GROUNDWATER CONTAMINATION SUPERFUND SITE

CB PANEL AND CONDUIT & CONDUCTOR SCHEDULES

SCALE:	DATE:	DWG. FILE:	SHEET NO.
AS NOTED	AUG 14, 2003	E6.DWG	E6

H:\CADD\Current\ENV-INFRA\Muscoy\Final Design_As Builts\E6.dwg User:mstetflinger Plotted:May 24, 2006 - 3:09pm Last Save:May 24, 2006 - 10:09am

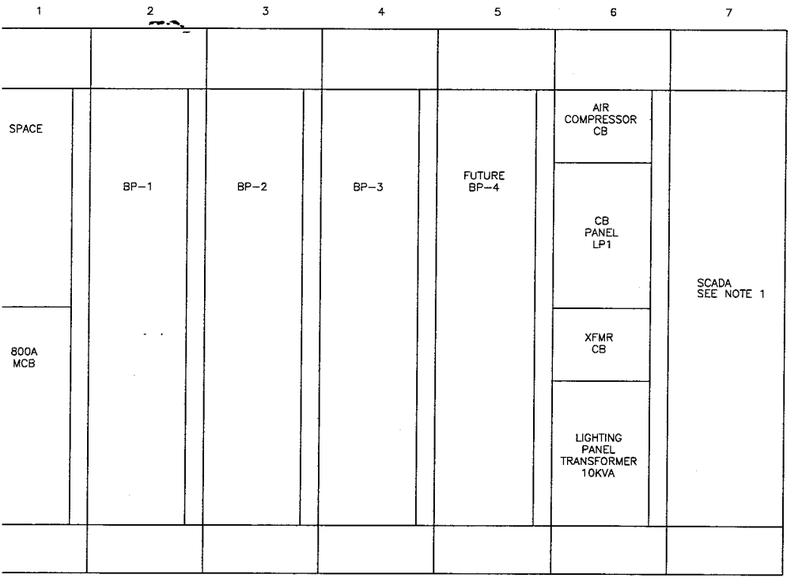

LOCATION	NAMEPLATE DISCRIPTION
1A	SPACE
1G	MAIN CIRCUIT BREAKER
2A	BOOSTER PUMP BP-1
3A	BOOSTER PUMP BP-2
4A	BOOSTER PUMP BP-3
5A	BOOSTER PUMP BP-4 (FUTURE)
6A	AIR COMPRESSOR CIRCUIT BREAKER
6C	CIRCUIT PANEL LP-1
6G	TRANSFORMER CIRCUIT BREAKER
6J	LIGHTING PANEL TRANSFORMER
7A	SCADA

MCC - INSIDE OF NEMA 3R STRUCTURE

N.T.S.

PANEL SCHEDULE

LOCATION: PUMP STATION MCC
SERVING: PUMP STATION LIGHT

120/240 VOLTS 1 Ø 3 WIRE
100 AMP MAIN LUGS 10 KAIC RATED

CIRCUIT DESCRIPTION	VA	AMP			AMP	VA	CIRCUIT DESCRIPTION
ATION LIGHT	748	20	1	2	20	1138	PARK LIGHT
ATION LIGHT	540	20	3	4	20	1000	PARK LIGHT
LE		20	5	6	20	1000	SCADA POWER
N		20	7	8	15	500	RADIO POWER
		20	9	10	20		CONTROL POWER
			11	12	20		SIX-CENSE POWER
			13	14			
			15	16			

NEUT.

D LOAD: 5 KVA 20 AMPS
DEMAND: 100%
DEMAND LOAD: 5 KVA 20 AMPS

LESS THAN
36"
UCED PRINT.
ACCORDINGLY.

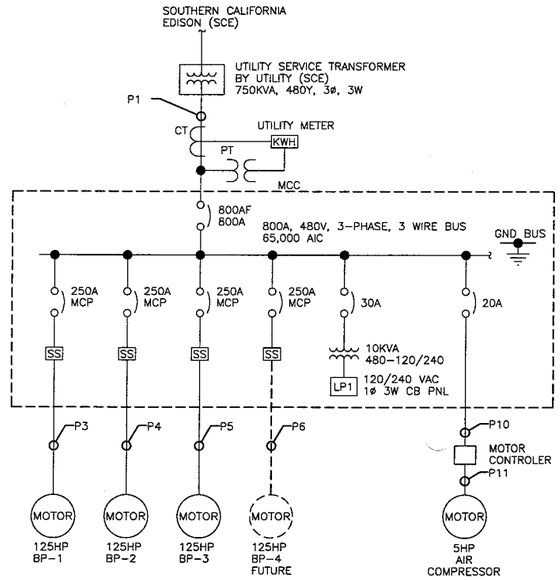

SINGLE - LINE DIAGRAM

N.T.S.

NOTES:

- TRANSFORMER PAD AND ENCLOSURE ARE DESIGNED FOR PARKWAY LOADING PER CALCS. #31654 USING 5,500 PSI. COMPRESSIVE STRENGTH CONCRETE.
- COVER IS DESIGNED FOR PARKWAY LOADING.
- VAULT TO BE PLACED ON A MIN. 6" BASE OF CRUSHER RUN FOR EVEN LOAD DISTRIBUTION AND EASE OF INSTALLATION.

THE FOLLOWING MATERIAL TO BE SHIPPED WITH EACH VAULT:
(a) 7/8" x 1 3/4" CONSEAL GASKET (45 FT. REQ'D.)

ORDERING INFORMATION:

K810-S842-11 FOR ASSEMBLY AS SHOWN.
APPROVED FOR EDISON SPEC. UGS-530 (500 SB-3).
TOTAL WEIGHT OF ASSEMBLY AS SHOWN IS 11,348 Lbs.

1. SB47-B42-11, 42" BOTTOM SECTION, WT. 6,400 Lbs.
2. PD96120-T6-11, 6" TRANSFORMER PAD, WT. 4,900 Lbs.
3. RPM "EDISON" 1 PIECE COVER W/(8) 1/2" x 2 1/2" P.H.S.S. BOLT W/CAPTIVE WASHERS (2) LIFT EYES, WT. 109 Lbs.
4. 16" x 20" KNOCKOUT x 3 1/2" DEEP, DRAFT AS FOLLOWS: T=2", S1= 3 1/2", S2=3 1/2", B=2", BOTTOM SECTION (8) SHELL MTD.
5. 1 5/8" x 1 5/8" UNISTRUT x 18" LONG (55-21-018), TRANSFORMER PAD (2) TABLE MTD.
6. ⊕ 1/2" P-35-T INSERT W/CLEAN-OUT HOLE, TRANSFORMER PAD (6) FRAME MTD.
7. X 1" GALVANIZED COIL THREAD INSERT, BOTTOM SECTION (4) CORE MTD.

GENERAL NOTES:

1. Minimum soil bearing capacity is hereby assumed to be 2000 PSF unless otherwise documented by a geotechnical report that shall be provided to Jensen Precast by the end user. Jensen Precast shall not be held responsible for the soil bearing capacity.
2. Installation of Manholes, Vaults, Handholes, Meter Boxes etc. will be as per Jensen installation procedures.
3. Structural modification to the Jensen line of products is not permitted without prior written approval from Jensen Engineering Department.
4. Do not scale the drawings, verify all dimensions including rough openings. If any discrepancies are found, notify the Jensen Engineer immediately.
5. The Jensen Engineer will interpret the intent of the drawings in case of possible conflict or discrepancy.
6. Permissible Variations:
   Dimensional Tolerances – The length, width, height, or dia. measurements of the structure when measured on the inside surfaces shall not deviate form design dimensions by more than the following:

Dimensions:	Tolerance:
0 to 5 Feet	1/4"
5 to 10 Feet	3/8"
10 to 20 Feet as agreed upon between the supplier and purchaser.	

7. Squareness Tolerance:
   The inside of the precast concrete component shall be square as determined by diagonal measurements. The difference between such measurements shall not exceed the following:

Measured Length:	Allowable Difference
0 to 10 Feet	1/2"
10 to 20 Feet	3/4"
20 Feet and over as agreed upon between the supplier and purchaser.	

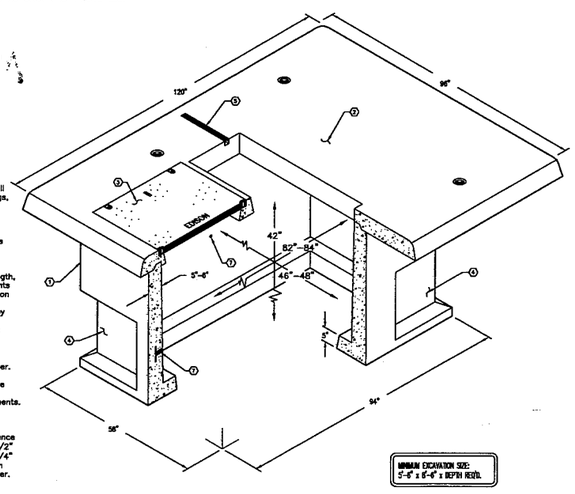

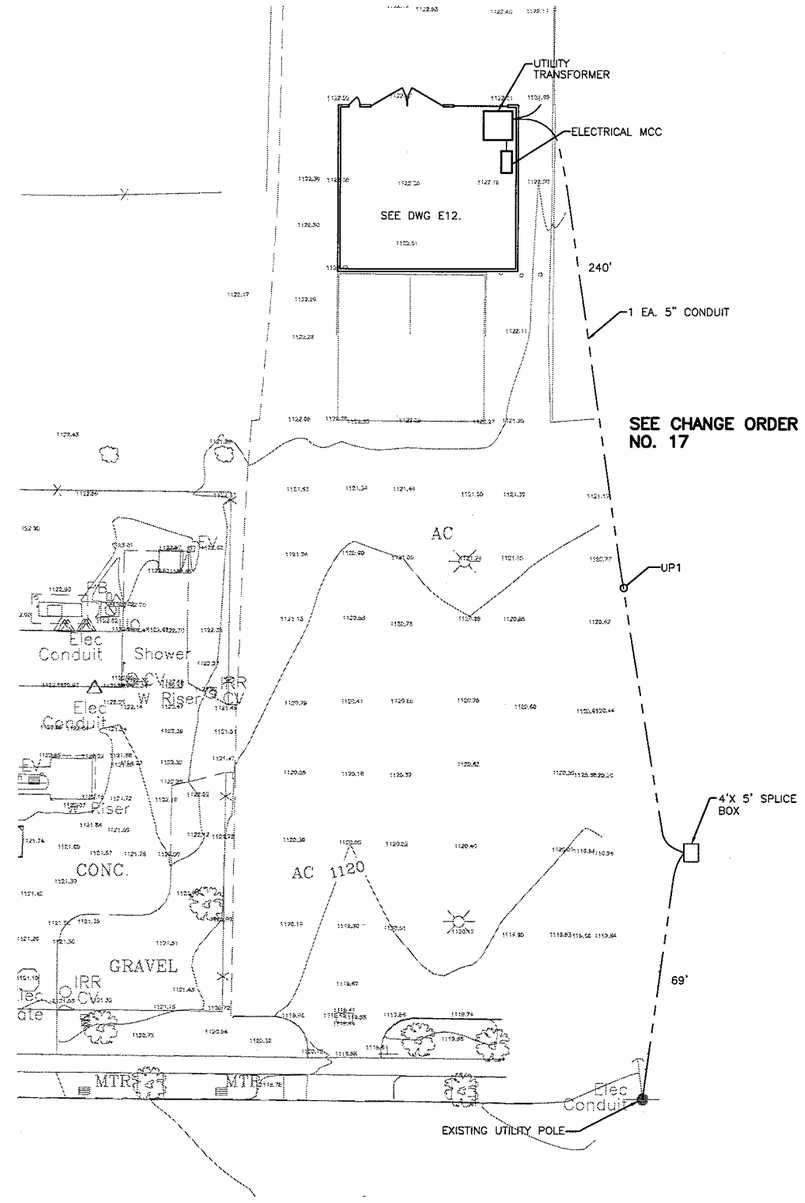

NOTES:

1. MCC SHALL BE PROVIDED WITH BACKPAN FOR MOUNTING OF CONTROLS, SCADA AND RADIO EQUIPMENT. WIDTH SHALL BE DETERMINED BY CONTRACTOR.

SITE LAYOUT

1"=20'-0"

20 0 20 40
SCALE IN FEET

N

RECORD DRAWINGS

REVISION			
DESCRIPTION	NO.	DATE	DESCRIPTION

REVISIONS

DESIGNED BY: PAS
DRAWN BY: ETB
CHECKED BY: GJ

URS
2870 Gateway Oaks Drive, Suite 300
Sacramento, California 95833-3500
(916) 928-3000
FAX: (916) 928-7263

REGISTERED PROFESSIONAL ENGINEER JAMES E. COOK No. E012723 Exp. 6/30/06 ELECTRICAL STATE OF CALIFORNIA

MUSCOY OU REMEDIAL DESIGN
19th STREET PLANT & ENCANTO PARK PUMPING PLANT
NEWMARK GROUNDWATER CONTAMINATION SUPERFUND SITE

ENCANTO PARK
BOOSTER PUMP STATION
ONE LINE DIAGRAM & SITE LAYOUT

SCALE:	DATE:	DWG. FILE:	SHEET NO.
AS NOTED	AUG 14, 2003	E11.DWG	E11

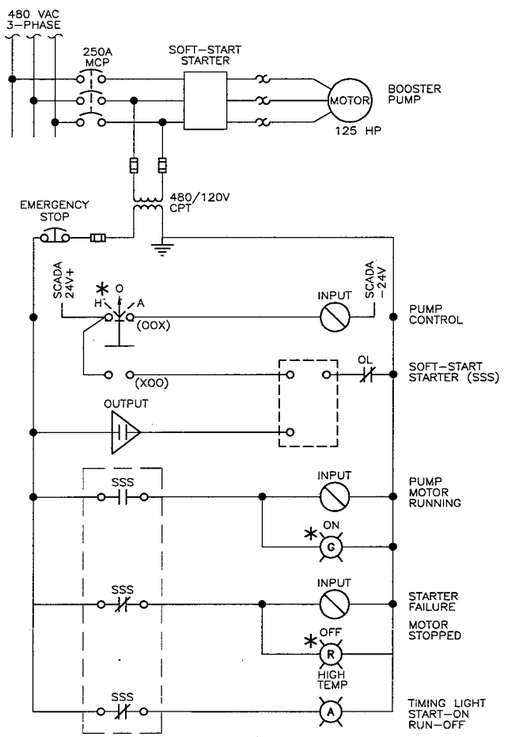

* = DEVICE ON SCADA PANEL

PUMP MOTOR CONTROL
(TYPICAL OF 3)
N.T.S.

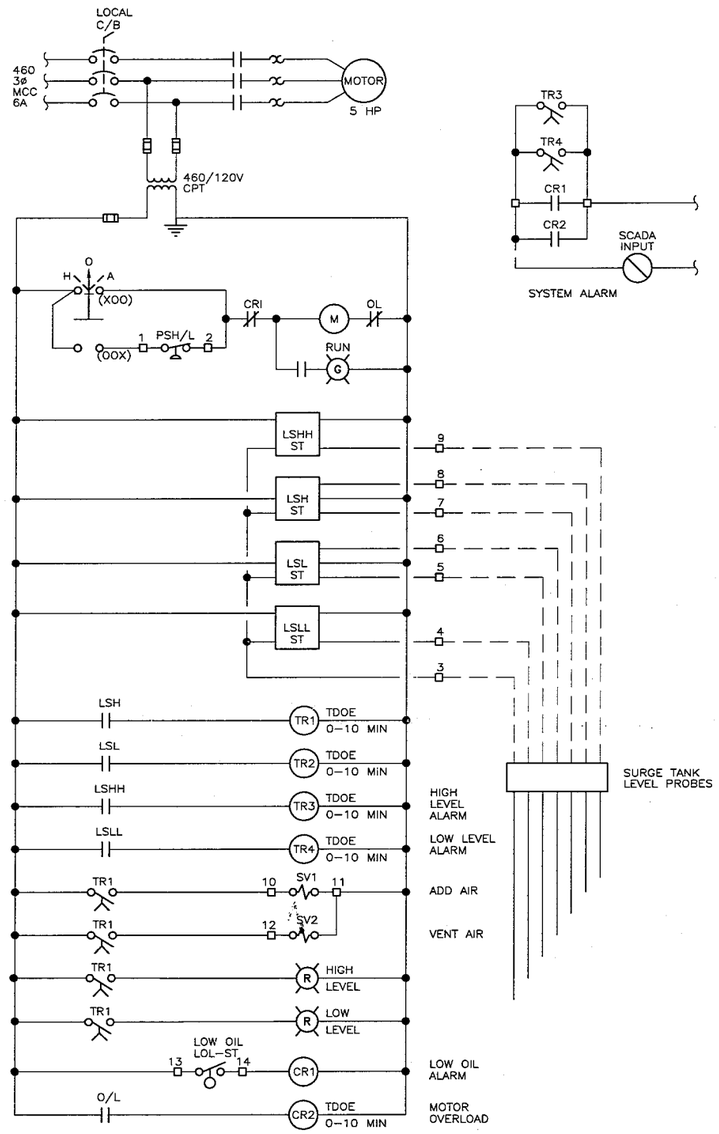

AIR COMPRESSOR / SURGE TANK
ELEMENTARY DIAGRAM
N.T.S.

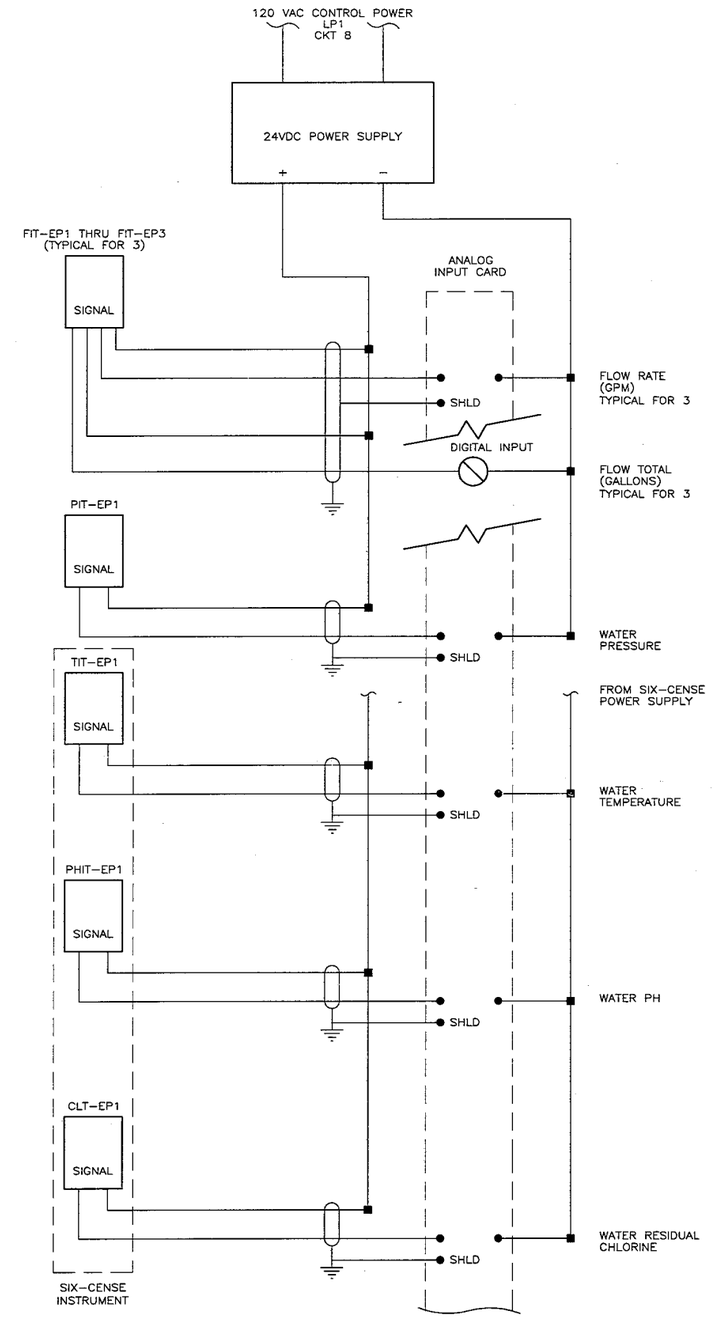

RECORD
DRAWINGS

SS THAN
6"
D PRINT.
CCORDINGLY.

ORD
WINGS

REVISIONS			
VISION			
SCRIPTION	NO.	DATE	DESCRIPTION

DESIGNED BY: MDW
DRAWN BY: BJR
CHECKED BY: GJ

URS
2870 Gateway Oaks Drive, Suite 300
Sacramento, California 95833-3500
(916) 929-2346
FAX: (916) 929-7283

REGISTERED PROFESSIONAL ENGINEER
JAMES E. COOK
No. E012723
Exp. 6/30/06
ELECTRICAL
STATE OF CALIFORNIA

MUSCOY OU REMEDIAL DESIGN
19th STREET PLANT & ENCANTO PARK PUMPING PLANT
NEWMARK GROUNDWATER CONTAMINATION SUPERFUND SITE

ENCANTO PARK
BOOSTER PUMP STATION
CONTROL ELEMENTARY DIAGRAMS

SCALE:	DATE:	DWG. FILE:	SHEET NO.
AS NOTED	AUG 14, 2003	E13.DWG	E13

4

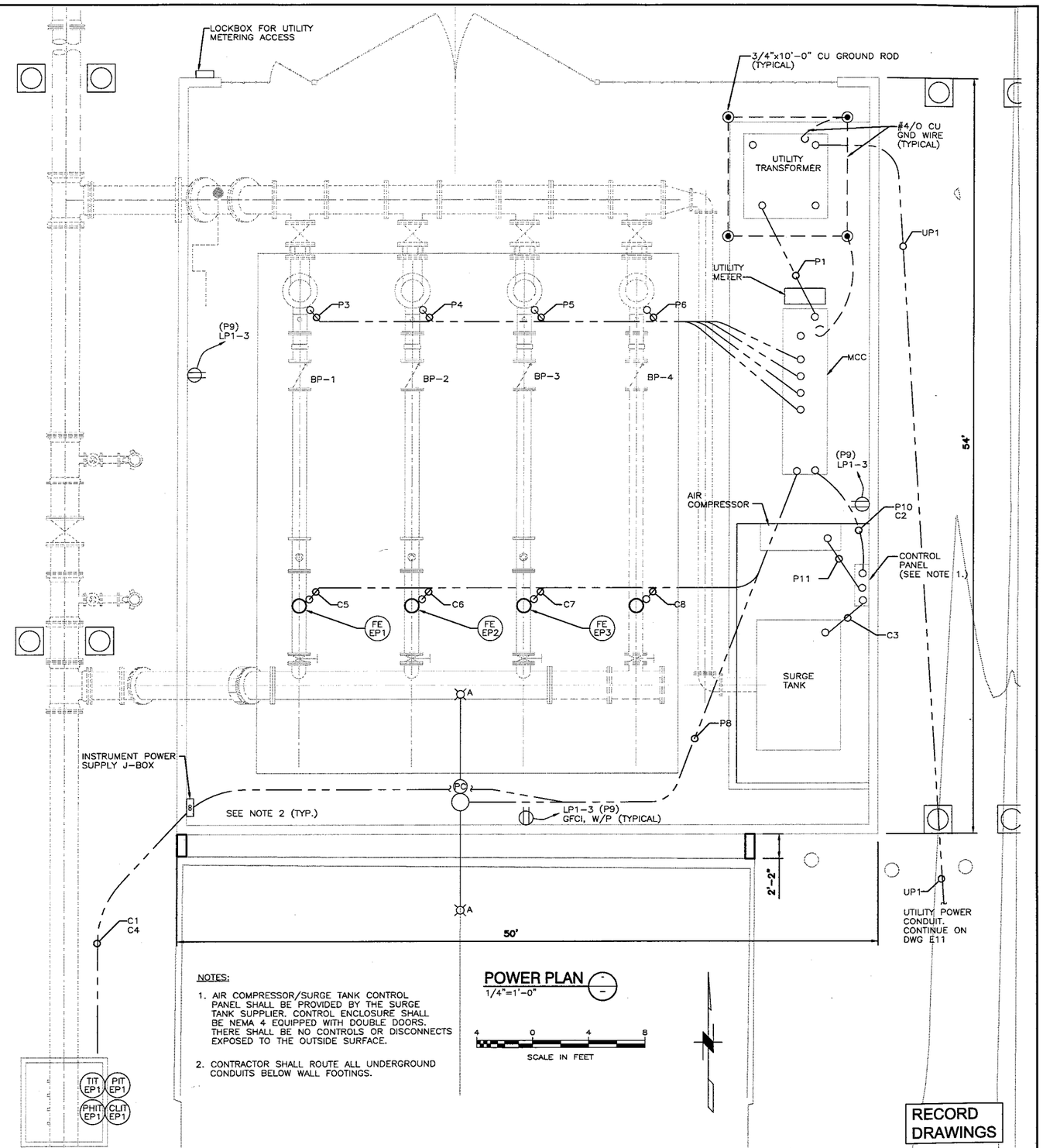

NOTES:

1. AIR COMPRESSOR/SURGE TANK CONTROL PANEL SHALL BE PROVIDED BY THE SURGE TANK SUPPLIER. CONTROL ENCLOSURE SHALL BE NEMA 4 EQUIPPED WITH DOUBLE DOORS. THERE SHALL BE NO CONTROLS OR DISCONNECTS EXPOSED TO THE OUTSIDE SURFACE.

2. CONTRACTOR SHALL ROUTE ALL UNDERGROUND CONDUITS BELOW WALL FOOTINGS.

POWER PLAN

1/4"=1'-0"

4 0 4 8

SCALE IN FEET

RECORD DRAWINGS

IF SHEET IS LESS THAN 24" x 36" IT IS A REDUCED PRINT. SCALE REDUCED ACCORDINGLY.

NO.	DATE	DESCRIPTION	NO.	DATE	DESCRIPTION
1	11/05	RECORD REVISION			

REVISIONS

DESIGNED BY: PAS
DRAWN BY: ETB
CHECKED BY: GJ

URS
2870 Gateway Oaks Drive, Suite 300
Sacramento, California 95833-3505
(916) 929-3000
FAX: (916) 929-7265

REGISTERED PROFESSIONAL ENGINEER JAMES E. COOK No. E012723 Exp. 6/30/08 ELECTRICAL STATE OF CALIFORNIA

MUSCOY OU REMEDIAL DESIGN
19th STREET PLANT & ENCANTO PARK PUMPING PLANT
NEWMARK GROUNDWATER CONTAMINATION SUPERFUND SITE

ENCANTO PARK
BOOSTER PUMP STATION
POWER PLAN AND DETAILS

SCALE:	DATE:	DWG. FILE:	SHEET NO.
AS NOTED	AUG 14, 2003	E12.DWG	E12

H:\CADD\Current\ENV-INFRA\Muscoy\Final Design_As Builts\E12.dwg User:msteffinger Plotted:May 24, 2006 - 3:18pm Last Save:May 24, 2006 - 3:18pm