APPENDIX F

SOLID WASTE MANAGEMENT

draft

Table of Contents

1.0 GOALS AND PURPOSE OF THE APPENDIX F-1

2.0 TYPES OF SOLID WASTES AND MATERIALS F-1
- 2.1 Overburden F-1
- 2.2 Waste Rock F-2
- 2.3 Tailings F-2
- 2.4 Spent Ore, Heap and Dump Leach Residues F-2

3.0 WASTE ROCK AND OVERBURDEN MANAGEMENT F-3
- 3.1 Piles and Dumps F-3
- 3.2 Mine Backfill F-6
- 3.3 Use in Facility Construction F-8
- 3.4 Use as Cover Materials F-8

4.0 TAILINGS MANAGEMENT F-9
- 4.1 Tailings Impoundments F-9
  - 4.1.1 Site Characterization F-10
  - 4.1.2 Impoundment and Embankments F-10
  - 4.1.3 Liners F-16
  - 4.1.4 Tailings Water F-17
  - 4.1.5 Operational Monitoring F-17
- 4.2 Dry Tailings Facilities F-18
- 4.3 Subaqueous Tailings Disposal F-19
  - 4.3.1 Water Covers over Constructed Impoundments F-20
  - 4.3.2 Disposal into Flooded Mine Workings F-21
- 4.4 Mine Backfill F-21

5.0 SPENT ORE/HEAP AND DUMP LEACH MANAGEMENT F-22

6.0 ISSUES RELATED TO CLOSURE AND RECLAMATION F-24
- 6.1 Soils Placement and Revegetation F-25
- 6.2 Runoff and Erosion Control F-26
- 6.3 Infiltration Control F-27
- 6.4 Seepage Control F-27
- 6.5 Other Considerations F-29
- 6.6 Spent Ore Treatment and Neutralization F-29
- 6.7 Post-Closure Monitoring F-30
- 6.8 Information and Analytical Needs F-31

7.0 ACID MINE DRAINAGE F-31
- 7.1 Controlling the Acid Generation Process F-32
- 7.2 Moderating the Effects of Acid Generation F-33
- 7.3 Controlling the Migration of Acid Mine Drainage F-34
- 7.4 Collecting and Treating Acid Mine Drainage F-34
- 7.5 Information Needs F-34

draft

8.0 REFERENCES F-35

List of Tables

Table F-1. Data Needs for Waste Rock Disposal Facilities F-5
Table F-2. Operational Monitoring of Waste Rock Dumps and Heap Leach Facilities F-5
Table F-3. Example Siting Criteria for Tailings Impoundments and Dry Tailings Facilities . F-10
Table F-4. Operational Monitoring of Tailings Impoundments F-17
Table F-5. Data Needs for Heap Leach Facilities F-23

List of Figures

Figure F-1. Hydrologic Cycle for A Typical Waste Pile F-7
Figure F-2a. Water-Retention Type Dam for Tailings Storage F-12
Figure F-2b. Sequential Raising, Upstream Embankment F-13
Figure F-2c. Sequential Raising, Centerline Embankment. F-14
Figure F-2d. Sequential Raising, Downstream Embankment F-15
Figure F-3. Layered Waste System F-28

draft

1.0 GOALS AND PURPOSE OF THE APPENDIX

Mining operations produce a variety of solid materials that require permanent management. In order to prevent or minimize environmental impacts, applicants must pay careful attention to the methods by which these materials will be disposed, the locations of the disposal facilities, and the engineering designs of the disposal facilities. The largest mines may generate over a billion tons of solid wastes that cover areas exceeding a thousand acres, and even smaller operations must handle and dispose of formidable quantities of materials that can affect large areas. The environmental behavior of these materials ranges from benign to deleterious, with specific areas of concern arising from sediment loading, metals contamination, cyanide release, and acidification. This appendix provides a brief overview of the issues related to the disposal of solid wastes which applicants may be expected to address during the NEPA and associated Clean Water Act permit application processes. It is not intended to provide a comprehensive review of solid waste disposal practices. Related information is provided in Appendix C, *Characterization of Ore, Waste Rock, and Tailings* and Appendix H, *Erosion and Sedimentation.*

2.0 TYPES OF SOLID WASTES AND MATERIALS

This appendix is concerned with the disposal of the four types of mining wastes and materials that are generated and managed in the highest volumes:

- Overburden
- Waste rock
- Tailings
- Heap and dump leach residues.

Other types of solid mining wastes that may require disposal include smelter slag, trash, construction debris, incinerator ash, wastewater treatment sludge, and sewage sludge. The management of sludge from wastewater treatment is discussed in Appendix E.

2.1 Overburden

Overburden consists of unconsolidated to poorly consolidated materials such as soils, alluvium, colluvium, or glacial tills that must be removed to access the ore body that will be mined and processed (Hutchinson and Ellison, 1991). In most cases, overburden materials will not contain significant quantities of leachable metals or acid-generating minerals. However, geochemical tests similar to those described in Appendix C, *Characterization of Ore, Waste Rock, and Tailings,* may need to be conducted to ensure the benign character of these materials. Humus-rich forest soils may be slightly acidic and should be tested if they would be used as cover materials or growth media atop metal-bearing wastes. Soils and unconsolidated deposits may require proper handling and disposal to prevent erosion and sediment loading to streams and other surface waters. Management of overburden is discussed in Section 3 below.

draft

2.2 Waste Rock

Waste rock is removed from above or within the ore during mining activities. Waste rock includes granular, broken rock and soils ranging in size from fine sand to large boulders, with the fines content dependent upon the nature of the geologic formation and methods employed during mining. Waste rock consists of non-mineralized and low-grade mineralized rock. Materials may be designated as waste because they contain the target minerals in concentrations that are too low to process, because they contain additional minerals that interfere with processing and metals recovery, or because they contain the target metal in a form that cannot be processed with the existing technology. Materials that are disposed as waste at one point in a mine's life may become ore at another stage, depending on commodity prices, changes in and costs of technology, and other factors.

Waste rock may be acid generating and may contain metals that can be mobilized and transported into the environment. These materials generally will require extensive geochemical testing (Appendix C, *Characterization of Ore, Waste Rock, and Tailings*) to determine if they will impact the environment over the short or long term. Special engineering designs, waste handling and disposal procedures, or closure and reclamation plans may be required for those materials whose characteristics may pose significant risks. Waste rock management is discussed in Section 3 of this Appendix.

2.3 Tailings

Tailings are produced by beneficiation activities that separate the target minerals or metals from the remaining host rock. Beneficiation begins when primary ore is crushed and ground to particle sizes ranging from sand- to silt-sized. Target minerals are separated from the ground ore using density or magnetic separation, froth flotation, or other concentration techniques. The target metal is then separated from the mineral by leaching, electrowinning, or other metallurgical techniques. Residues (tailings) from these processes may make up to ninety percent of the original ore mined. Although lower in the target minerals, the tailings can have a wide range of composition that depends on the mineralogy of the primary ore material, the type of separation process employed, and the efficiency of the separation process. Based on the original constituents, the tailings may contain acid-generating minerals and a variety of metals. The small grain size of most tailings makes them an important potential sedimentation source that is susceptible to erosion and downstream transport. Characterization of tailings are discussed in Appendix C. Section 4 below discusses tailings management.

2.4 Spent Ore, Heap and Dump Leach Residues

Some primary ores, notably those of copper and gold, may be processed by heap or dump leaching techniques. Dump leaching is the process of applying a leaching agent (usually water, acid, or cyanide) to piles of ore directly on the ground, to extract the valuable metal(s) by leaching over a period of months or years. Heap leaching is similar to dump leaching except the ore is placed on lined pads or impoundments in engineered lifts or piles. Ores may be coarsely crushed prior to leaching or may be leached as run-of-mine materials. Spent materials contain

draft

lower concentrations of the target mineral, and they may contain other metals, chemical complexes of the target metal, acid-generating minerals, and small quantities of the leach solution. After leaching, the spent ore may be treated by rinsing with fresh water or chemical additives that dilute, neutralize, or chemically decompose leach solutions and metal complexes. Characterization of spent ore is discussed in Appendix C. Section 5 below discusses the management of spent ore.

3.0 WASTE ROCK AND OVERBURDEN MANAGEMENT

Waste rock and overburden materials are managed according to specific site conditions, regulatory requirements, and materials composition. Management practices that are suitable at one site may be unsuitable at another due to factors as diverse as regulatory requirements, material properties, climate, and cultural values. The disposition of these materials can vary greatly depending on their mineralogical and chemical compositions and numerous economic factors. Some materials may be suitable for beneficial uses such as road surfacing, aggregate, structural rock, or decorative rock, whereas other materials possess characteristics that require their permanent disposal in an engineered management facility. Recent contaminant releases associated with waste rock materials or disposal practices at several mines emphasize the importance of comprehensive geochemical testing programs and sound geotechnical studies and engineering designs. This section briefly describes four widely used waste rock management techniques, highlighting the issues and information needs that should be addressed for NEPA and other analyses

3.1 Piles and Dumps

Waste rock and overburden that cannot be put to beneficial use or that contain compounds that may be detrimental to the environment, generally are placed in a location where they can be physically stabilized. Placement is accomplished using a variety of techniques that may include end-, sidehill-, or random-dumping, and dozing. Dump design may vary markedly depending on the nature of the mining operation and the terrain in which materials are being placed. In steep, mountainous areas, dumps may have faces of a few hundred meters height. For these dumps, the buildup of pore water pressures with time is an important variable that is difficult to evaluate quantitatively, but that may lead eventually to partial slope failure (Kent, 1997). Dump designs of this type may require some level of risk analysis to determine potential impacts should failure occur (Kent, 1997). Dumps placed as valley-fill deposits may require the construction of rock underdrains to permit the flow of water through the drainage. The materials used to construct these drains needs to be thoroughly tested to ensure that they will not contribute metals, acid, or other constituents to surface (EPA, 1993a; 1993b). Dump underdrains may need to be tied into the mine drainage or storm water drainage systems that convey seepage to treatment facilities (see Appendix E, *Wastewater Management*).

Dumps that would contain waste rock capable of releasing significant quantities of metals, acidity, or other constituents may require special design features or waste handling practices to minimize the potential for environmental impacts (SRK, 1992a; Environment Australia, 1997). Dumps can be designed with features to control or reduce acid generation,

draft

control the migration of poor-quality drainage, or collect and treat poor-quality drainage (SRK et al., 1989). These features may include:

- Waste segregation and encapsulation (i.e., cellular construction; SRK et al., 1989),
- Blending and interlayering with materials that neutralize acidity and metals release (i.e., base amendments; e.g., SRK et al., 1989; Mehling et al., 1997).
- Waste conditioning to remove acid generating minerals (SRK et al., 1989).
- Incorporating low permeability materials to slow the migration of poor-quality drainage through a waste rock dump (SRK et al., 1989).
- Designing and preparing substrates that would minimize infiltration and route seepage to collection and treatment points.
- Incorporating bactericides to slow the rate of pyrite oxidation (SRK et al., 1989; Environment Australia, 1997).

Mines that produce a mix of acid-generating and acid-neutralizing waste rock must be careful to design and construct dumps in a manner that does not create local "hot spots" of acid generation from which seepage could escape. Section 7 of this appendix discusses acid drainage considerations in more detail.

Table F-1 lists the type of data needed to select a suitable site for a waste rock dump and some critical design factors of dump construction. Table F-2 identifies monitoring that may be conducted during dump construction and operations. In order for regulatory agencies to perform NEPA analyses and permitting, it is critical that mine applicants supply the following information related to waste rock dump management:

- Describe the criteria that were used to determine whether proposed sites are technically and economically feasible (e.g., Table F-1). Evaluate the importance of critical factors such as foundation stability, substrate bearing capacity, ground water conditions, and surface water hydrology. Compare to any applicable regulatory requirements.

- Provide the rate and total volume of waste rock to be disposed. Characterize the physical and chemical properties of the waste rock and how they relate to dump stability and leachability. Characterization of waste rock is discussed in Appendix C.

- Develop a water balance (see Figure F-1) and predict the potential for seepage and run-off from waste rock dumps during dump construction, operations, and closure in order to design appropriate wastewater management (e.g., containment and/or treatment, need for discharge permit, etc.). Various models are available to facilitate this. For example, the HELP (Hydrologic Evaluation of Landfill Performance) model may be used to predict leachate quantities. Where modeling is used, all model assumptions, input parameters, and uncertainties should be disclosed and a sensitivity analysis may be necessary (see Section 6 of Appendix A, *Hydrology* for general considerations related to modeling). Methods for estimating a water balance for waste piles, modeling of waste rock dumps, and techniques to estimate seepage quality are provided in Hutchinson and Ellison (1991), MEND (1995), SRK (1992b), MEND (1996), and Price (1997). Water balances are discussed in Appendix A. Wastewater management is discussed in Appendix E.

draft

- Describe how the dump will be constructed and managed during operations and closure in terms of maintaining dump stability and reducing impacts to the environment. Develop performance standards and compare to any applicable regulatory requirements (e.g., standards for containment, stability, etc.).

- Develop and describe operational and environmental monitoring plans to ensure dump stability, adherence to performance standards, and to identify impacts to surface and ground water quality. Table F-2 identifies types of monitoring that may be required. Monitoring plans should include action levels and contingency plans. Monitoring plans should incorporate quality assurance (QA) and quality control (QC) (see Section 5 of Appendix B, *Receiving Waters* for a description of quality assurance and quality control plans).

See Section 6 of this appendix for additional considerations related to waste rock dump closure and Section 7 for considerations related to acid drainage.

Table F-1. Data Needs for Waste Rock Disposal Facilities.

Critical Design Factor	Data Needs	Data Source/Methodologies
Facility Site Selection	Topography	Topographical maps, Aerial photos
	Geology and Soils, including fault mapping	Geological maps, Engineering tests of site samples.
	Seismicity (natural and blasting-induced)	Geological maps, Seismic zone maps, Uniform Building Code (U.S. ACE, 1995), Mine Plan of Operation, Engineering tests of site samples.
	Surface Water Hydrology	See Appendix A
	Ground Water Hydrogeology	See Appendix A
	Baseline Water Quality	See Appendix B
	Operational Considerations	Mine Plan of Operation
Waste Rock Characteristics	Physical Properties	See Appendix C
	Chemical Properties	See Appendix C
Pile/Dump Construction	Foundation Stability	Geotechnical and engineering tests of site soil samples.
	Pile Stability	Geotechnical and engineering tests of waste rock materials.
	Surface Water Diversion	See Appendix H
	Seepage/Run-off Collection and Treatment	See Appendix D.

draft

Table F-2. Operational Monitoring of Waste Rock Dumps and Heap Leach Facilities

Type of Monitoring	Methods Used	Purpose
Geotechnical	Visual inspection; Extensiometer; Leveling surveys; Soil strength testing; Soil borings.	Detect changes in slope stability, compaction, and settling that may identify structural weaknesses or signal potential failure of the facility.
Surface Water	Flow/Runoff monitoring; Upstream and downstream water quality analyses	Detect impacts to surface water quality.
Ground Water	Water table monitoring; Upgradient and downgradient water quality analyses	Detect impacts to ground water quality.
Hydraulic	Precipitation/Infiltration measurements; Piezometers; Water quality analyses.	Detect development of water table within pile, identify fluid pathways, monitor internal pore water pressures.
Thermal	Temperature Probes	Detect temperature increases within the pile that may indicate sulfide oxidation.
Pore Water	Water quality analyses	Determine quality of leachate, Early detection of acidification

3.2 Mine Backfill

Mine backfilling is the act of transporting and placing overburden, waste rock, or tailings materials in surface or underground mines. Tailings are more often used as backfill than waste rock or overburden. The technique is being used increasingly as a remediation measure (e.g., to minimize the potential for acid generation in mine walls and/or the backfilled material) and to minimize the amount of surface disturbance required to store waste materials. Coarse-grained materials such as waste rock and overburden typically are hauled to backfill locations using vehicles or conveyors. Due to the increase in rock volume that occurs through blasting and excavation, mine voids can accommodate a maximum of approximately 70 percent of the original material that was excavated and, in practice, the amount is likely to be significantly less. The remaining waste rock and overburden still must be put to beneficial use or disposed of in surface facilities. Coarse backfill materials will have comparatively high porosity and permeability. Their larger surface areas (compared to solid rock) increase the availability of metals and make these materials more susceptible to leaching and acidification. Materials that would be stored in locations above the water table may be subject to periodic flushing by infiltrating meteoric waters which could remove accumulated soluble oxidation products and transport them to surface or ground waters.

Examples of the use of waste rock as mine backfill follow. The Goldbug Waste Rock Repository at Landusky Mine in Montana is material that has been backfilled into the old Goldbug Pit. The waste is placed atop 2-3 feet of crushed dolomite/ limestone which, in turn, sits on a compacted clay liner that is engineered to drain to a collection area. Waste is segregated within the dump to encapsulate acid-generating waste rock within non-acid generating waste. Similarly, at the Castle Mountain Mine in California, waste rock has been used to backfill the initial pit; there, no special handling was required or needed.

draft

If waste rock and overburden are to be used as backfill, mine applicants should provide information of the following types to allow regulatory agencies to conduct full NEPA analyses and make permitting decisions.

- Describe backfill operations and closure, including: timing and amounts of material proposed for backfilling; means of transporting the material to the backfill site; types and timing of storage, if any; if material is to be stabilized or otherwise treated, full description of additives and treatment processes.

- Describe physical characteristics (e.g., size distribution, including percent fines, moisture content) and chemical characteristics of backfill materials and any additives (see Appendix C) .

- Predict the structural stability and leachability of backfill material and enclosing mine rock.

- Description of mine hydrology, including post-closure (see Appendix A). Prediction of water quality in the mine, both with and without backfilling in order to determine potential for impacts to groundwater and surface water and to design appropriate controls.

- Description of monitoring program to be used to verify predictions and allow detection of the need for changes.

draft

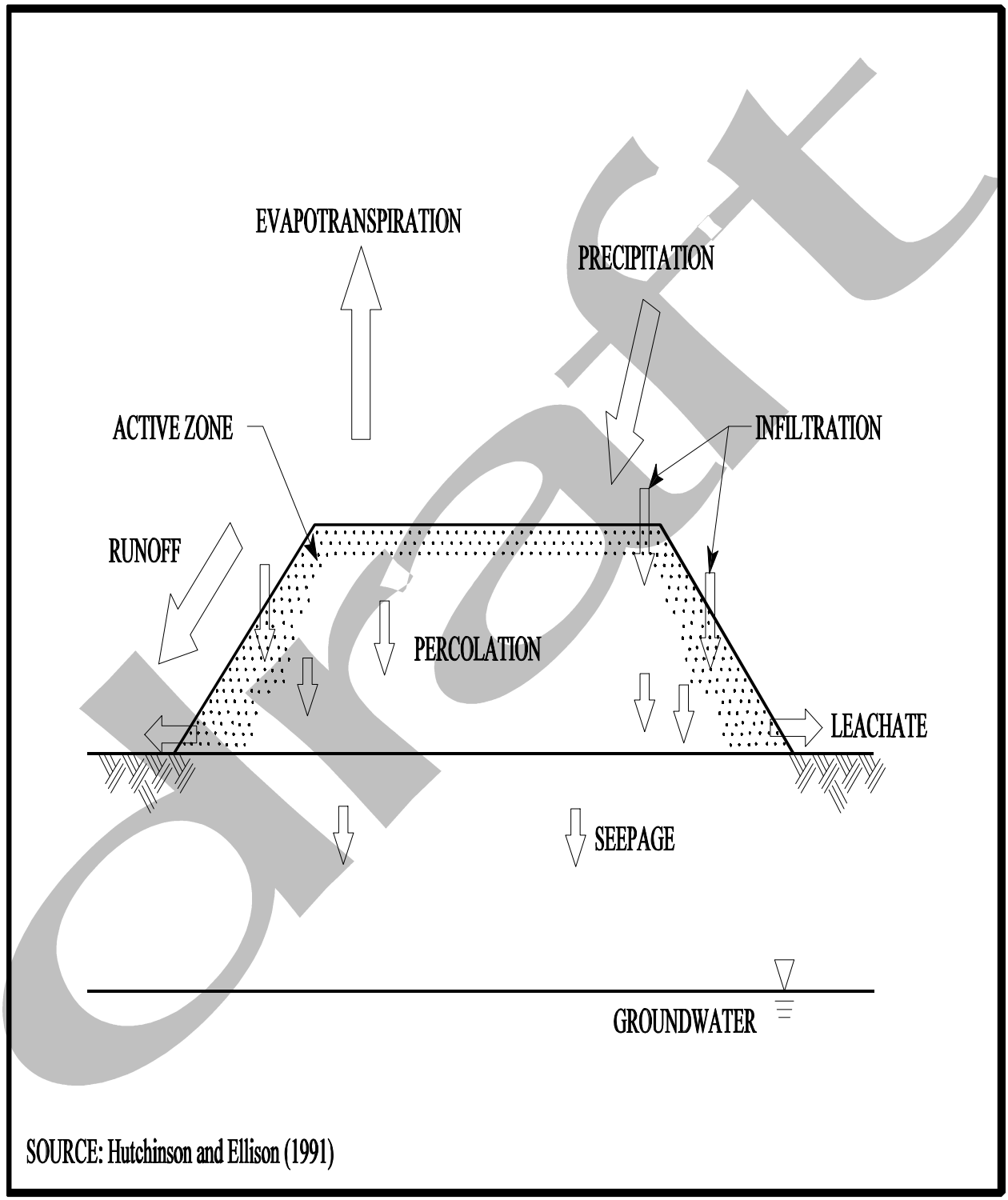

Figure F-1. Hydrologic Cycle for A Typical Waste Pile.

3.3 Use in Facility Construction

Waste rock and overburden materials can be beneficially used as construction materials at many mine sites. Applicants proposing to use waste rock to construct roads, impoundments, buttresses, underdrains, or other facilities or as rip-rap to line channels or stabilize embankments, will need to conduct geochemical tests similar to those described in Appendix C, *Characterization of Ore, Waste Rock, and Tailings.* Testing programs should be designed to ensure that these materials will not themselves generate acid or otherwise cause negative environmental impacts.

If waste rock and overburden are to be used in facility construction, mine applicants should provide information of the following types to allow regulatory agencies to conduct full NEPA analyses and make permitting decisions.

- Describe how the waste rock or overburden will be used for facility construction, including: timing and amounts of material proposed for use, and the purpose for which they will be used; means of transporting the material from the mine to storage and/or construction sites; types and timing of storage, if any.
-
- Physical (e.g., size distribution, including percent fines, moisture content) and chemical characteristics (e.g., acid generation potential, metals concentrations) and how they relate to stability and leachability.
- Prediction of water quality in situations where the materials will be in contact with wastewater/seepage (e.g,. when used as drains) and of any best management practices (BMPs) or other controls necessary to meet standards.
- Description of alternate sources of construction materials, including the same types of information provided for waste rock/overburden.
- Description of monitoring program(s) to be used to verify predictions and allow detection of the need for changes.

3.4 Use as Cover Materials

Waste rock may be used to cover and stabilize fine-grained tailings. The intent is to reduce or prevent fluvial or aeolian erosion, transport, and redeposition of the fine-grained materials (e.g., Woodward-Clyde, 1998).

If applicants propose to use waste rock as cover material, they should provide the following types of information to support the NEPA analyses and permitting decisions:

- Timing and amounts of material proposed for use, and the means of transporting the

draft

material from the mine to the storage and/or tailings areas.

- Types and timing of storage, if any. This should include any storage site preparation (e.g., run-on/run-off controls, temporary vegetation)

- Geotechnical evaluation of the stability of the underlying tailings materials, with and without the waste rock cover.

- Geochemical evaluation of the waste rock/overburden that allows prediction of changes in water quality of infiltrating run-on and precipitation, and of any run-off.

- Description of alternate sources of cover materials, if any, including the same types of information provided for waste rock/overburden.

- Description of the ability of the cover material to support vegetation or other long-term closure solution
- Demonstration that the cover will meet performance standards and regulatory requirements during operations and following closure.

- Description of monitoring program(s) to be used to verify predictions and allow detection of the need for changes.

4.0 TAILINGS MANAGEMENT

Tailings materials are typically disposed of in impoundments. Other management practices that are becoming more common include disposal in dry tailing facilities, disposal under water covers (subaqeous disposal), and disposal in mine voids (mine backfill). This section briefly describes these tailings management techniques. More detailed descriptions are provided in Vick (1990) and Johnson (1997); an overview of tailings disposal in impoundment settings in given in EPA (1994a). As discussed in Section 2.3 and Appendix C, characterization of the tailings materials is critical to predicting environmental impacts and designing appropriate management. As this section will discuss, extensive studies are necessary to evaluate potential tailings management sites and to design and operate the sites.

4.1 Tailings Impoundments

Most mines dispose of tailings in engineered impoundments that cover areas ranging from a few acres to more than a thousand acres. Thickened tailings solids typically are sluiced to the impoundment and deposited by spigotting or through single-point discharges or cyclones. As solid particles settle out of suspension, clarified water from the top of the impoundment is generally recycled to the milling process circuit for reuse. In some cases (e.g., in areas of net precipitation or following mine closure), water may be discharged from the impoundment, in which case an NPDES or land application permit is required. Tailings impoundments may also be used as emergency containment for excess storm water run-off from other areas of the mine site and for disposal of sludges from on-site mine wastewater or sewage treatment plants.

draft

Critical issues related to the design and management of tailings impoundments are discussed in the following subsections. Issues related to closure and reclamation of tailings impoundments are discussed in Section 6.

4.1.1 Site Characterization.

The choice of a tailings impoundment site is based on the need to maximize desirable features and minimize undesirable features. Criteria typically used to determine an appropriate tailings impoundment site are presented in Table F-3. Site characterization studies need to include comprehensive geological, geotechnical, and engineering evaluations to ensure the long-term stability of the impoundment. As recently demonstrated at a Spanish zinc mine, failure to conduct adequate site foundation studies can lead to tailings spills, leaks, and partial dam collapse (Mining Engineering, 1998).

Table F-3. Example Siting Criteria for Tailings Impoundments and Dry Tailings Facilities

Criteria to Determine Initial Site Feasibility	
Anticipated tailings volume	Climate, including type and magnitude of storms
Tailings grain size and composition	Topography
Hydrological conditions	Geology and mineralization, including seismic activity
Proximity to milling/processing operations	Hydrogeological conditions, including foundation permeability
Criteria to Determine Final Site Suitability	
Visual impact	Seepage release potential
Land use of site and surrounding area	Surface water discharge potential
Ecological resources	Airborne release potential
Site access	Development and operating costs
Run-on control feasibility	Wetland impacts

Source: Vick (1990); Johnson (1997).

4.1.2 Impoundment and Embankments

Vick (1990) and others discuss the different types of tailings impoundments and embankments. The choice of impoundment type is determined primarily by site topography (Vick, 1990). Cross-valley impoundments are used where drainages are incised into hilly terrain. Sidehill impoundments are three-sided embankments arranged in stair-step fashion on broad areas of sloping terrain. Valley bottom impoundments are constructed in stream valleys that are wide enough to route streams between the embankment and opposite valley wall. Fully enclosed ring dike impoundments are used on flat terrain.

draft

Surface embankments can be classified into two general categories: water-retention type dams and raised embankments (Vick, 1990). Water-retention type dams normally are placed in valley bottoms, but occasionally are used on hillsides. They commonly are used for finely ground materials such as flotation tails and to construct impoundments with high water storage requirements. Water-retention type dams are constructed of earthen materials or concrete to their full height prior to tailings placement. Because they are intended to prohibit horizontal fluid flow, most are designed with impervious cores, filter material, drains, and rip-rap (Figure F-2a) (Vick, 1990).

Raised embankments begin with starter dikes that are designed to contain the amount of tailings expected during the first few years of production. Starter dikes are constructed using a wide variety of materials that range from natural borrow soils to waste rock to tailings (Vick, 1990). The embankment is raised periodically as dictated by mine operations. Embankment height is increased using upstream, downstream, or centerline construction methods (Figure F-2b, -2c, and -2d) (Vick, 1990). Upstream construction is generally the least costly because it requires the least amount of dike fill material; however, it is susceptible to liquefaction and requires careful control of tailings discharge (Vick, 1990). In contrast, downstream construction offers good seismic resistance and can be used for water storage; this method is the most costly and requires the largest amount of fill material (Vick, 1990). Centerline construction shares advantages and disadvantages of the other methods. The raised embankment method is popular because embankment designs are comparatively simple and it provides the economic benefit of spreading construction costs over a longer period (Vick, 1990).

Stream diversions may be incorporated into each category of impoundment if the embankment is constructed in the bottom of a valley having significant drainage from storm runoff or in a valley that produces substantial continual runoff. Especially in areas of high stream flow or high precipitation, diverting water around impoundments can be necessary to maintain proper water balances and to promote quiescent conditions in the impoundment for settling. They can also be particularly useful for minimizing tailings erosion during storm events (see Appendix H, *Erosion and Sedimentation*). Diversions can be constructed either as conduits located below the impoundment or as ditches that skirt the perimeter of the impoundment. The feasibility of diversions depends on the particular site conditions.

Seepage control may be used to protect the structures associated with a tailings facility and to provide barriers to contain fluids originating from the facility. It can be used to partly or completely contain the lateral flow of tailings waters through the subsurface. Types of commonly used seepage barriers, which restrict flow, include cutoff trenches, grout curtains, and slurry walls (Vick, 1990). Seepage collection devices include collection wells, ditches, and ponds. For so-called “zero discharge” impoundments where seepage is collected and returned to the impoundment or otherwise used, long-term plans for seepage control/management have to be considered during design, not just at the time of closure.

For the NEPA process, applicants should provide at least the following information related to tailings impoundment and embankment design and operation:

- Describe the criteria that was used to determine whether proposed tailings impoundment sites and designs are technically and economically feasible (see Table F-3). Evaluate the

Draft

importance of critical factors such as foundation stability, substrate bearing capacity, and ground water and surface water hydrology. Compare predicted impoundment performance to applicable regulatory requirements.

- Specify the sources (and their acquisition), types and volumes of construction materials required for the dam.

- Investigate naturally occurring hazards at the dam site or within the impoundment area and assess the risks that these hazards pose.

- Perform stability and liquefaction analyses consistent with State and other regulatory requirement.

- Provide the rate and volume of tailings to be disposed. Characterize the physical and chemical properties of the tailings and how they relate to impoundment/embankment stability and leachability. Characterization of tailings is discussed in Appendix C.

-

- Develop a water balance and predict effluent quantity and quality (including seepage) under normal conditions and under storm scenarios, and describe how seepage, if any, will be collected and managed. See Section 4.1.4. below.

- Describe impoundment construction and management, including construction QA/QC, and performance standards necessary to meet applicable regulatory requirements.

Information needs related to impoundment liners and monitoring is discussed below. Closure issues related to impoundments and embankments and discussed in Section 6 below. Issues related to acid drainage are discussed in Section 7.

draft

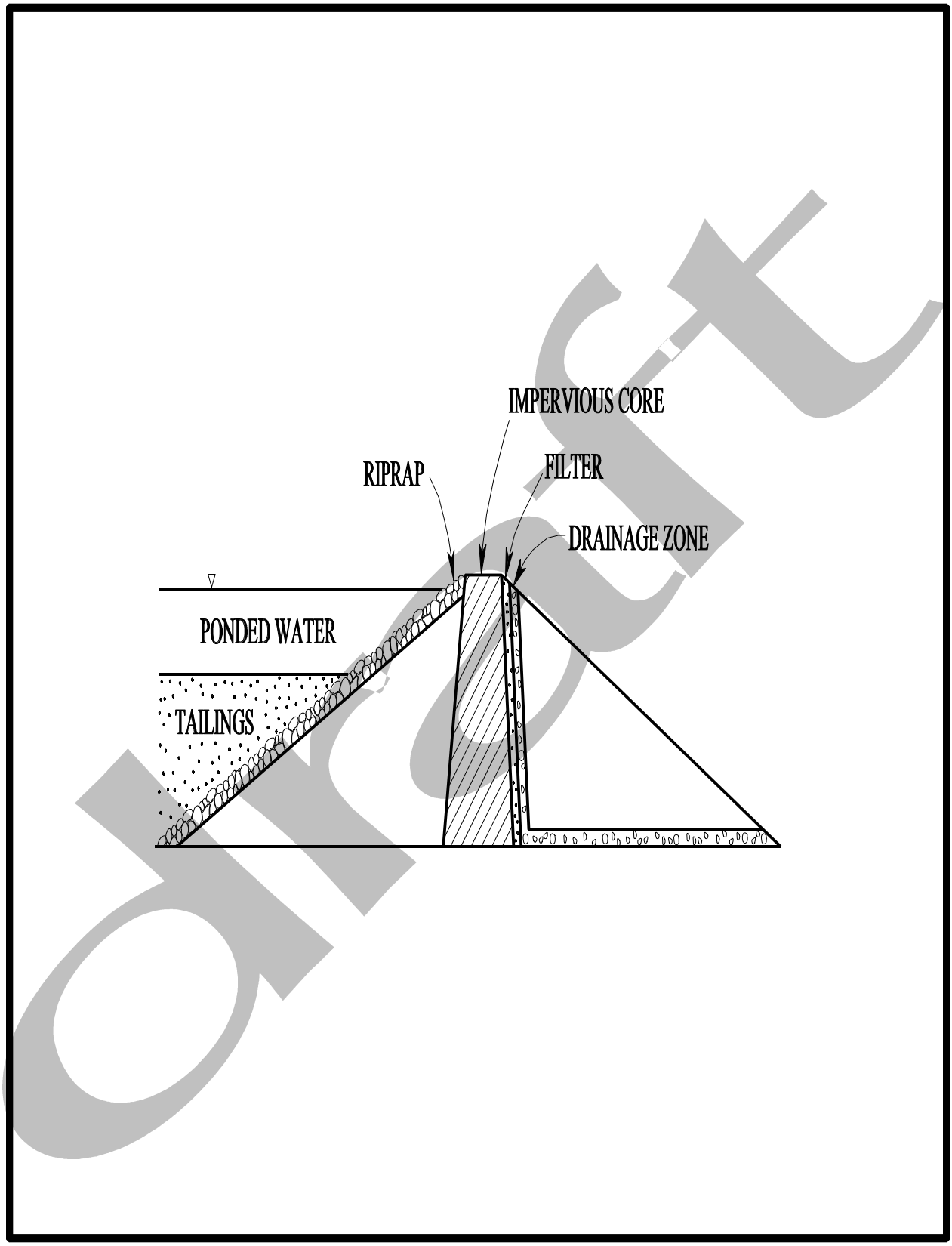

Figure F-2a. Water-Retention Type Dam for Tailings Storage.

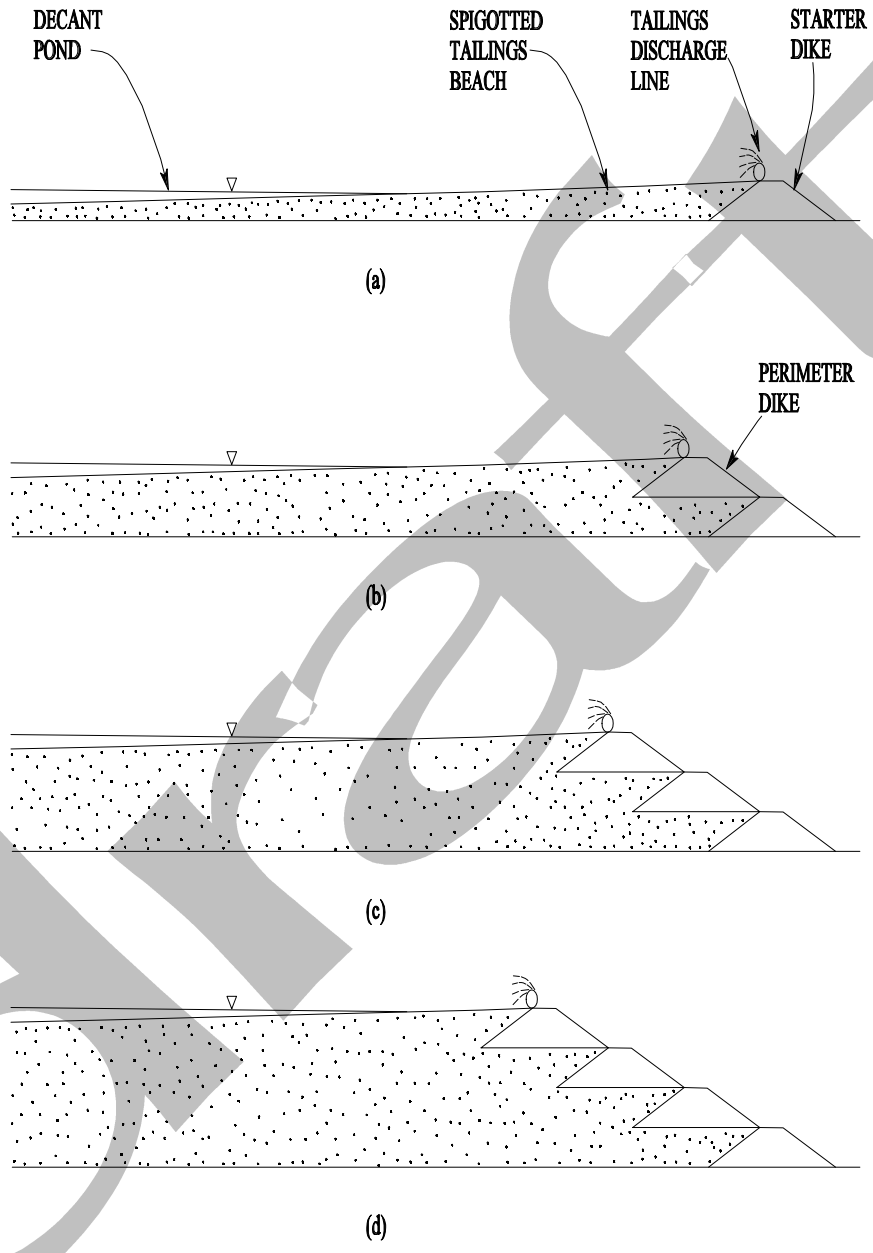

Figure F-2b. Sequential Raising, Upstream Embankment.

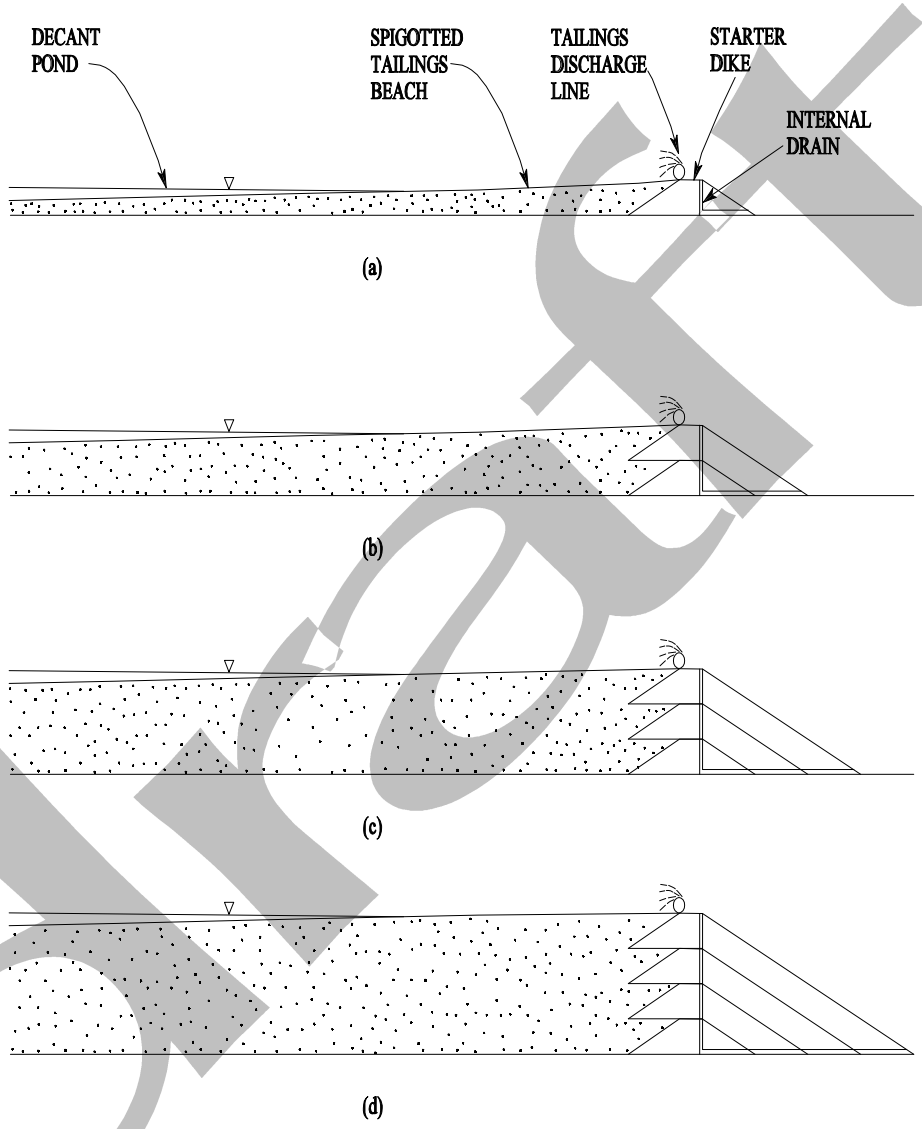

Figure F-2c. Sequential Raising, Centerline Embankment.

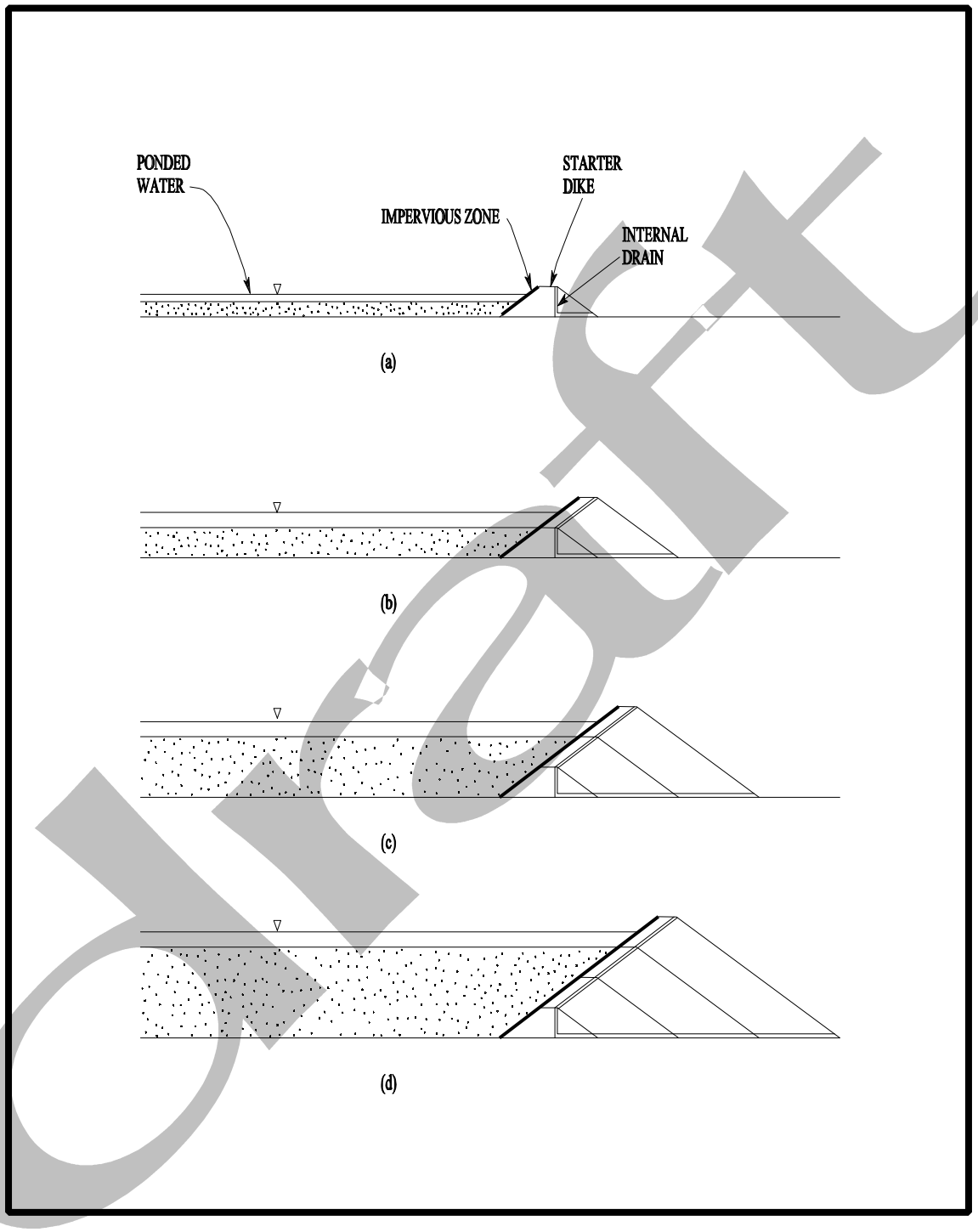

Figure F-2d. Sequential Raising, Downstream Embankment.

4.1.3 Liners

At sites where mill effluents containing toxic constituents (e.g., cyanide or radioactive isotopes) will be discharged to a tailings impoundment, tailings facilities may need to be fitted with a liner system. The decision to choose a liner can be made after determining if the substances contained in the tailings are toxic, if sufficient quantities of the substances exist, and if sufficient quantities of those substance can reach ground water and degrade it. In addition, State regulations may require liners. Tailings pond liners can be composed of compacted clay, synthetic materials, or tailings slimes. Each has advantages and disadvantages. Compacted clay liners provide good containment for relatively low material and placement costs. However, not all sites contain sufficient suitable material. Synthetic liners have the advantages of low permeability and consistent quality, but disadvantages that include high product cost, high placement cost, and substantial foundation preparation requirements. Both clay and synthetic liners can be subject to damage by settling. Mill slimes offer an inexpensive source of low permeability material that is used in a similar manner to a clay liner. Careful placement of slimes can provide good containment. A slime liner also can provide a superior seal in case of foundation settling or geologic movement due to its plasticity. Disadvantages of slime liners include the necessity of careful material placement, the requirement that the material not contain toxic materials that could escape the containment area, and the difficulty in predicting long-term effectiveness of containment.

If a tailings impoundment is to be lined, or if a liner is to be used over part of an embankment, mine applicants should provide information of the following types to allow regulatory agencies to conduct full NEPA analyses and make permitting decisions.

- Delineation of the initial area to be lined, anticipated expansions, and the maximum area that might be lined, and the approximate schedule for expansions (including the likely maximum amount of exposed liner at any one time under various scenarios– this is crucial for estimating run-on/run-off).

- Description of liner site preparation activities (compaction, etc.).

- Description of the type and characteristics of liner proposed (type of synthetic material, sources of clays, physical characteristics).

- Information on compatibility of tailings and liner materials, including long-term compatibility.

- Description of leak detection, if any, and contingency plans for detected leakage.

- Analysis of liner effectiveness, such as a demonstration of how liner will meet applicable performance standards for containment over the long term.

4.1.4 Tailings Water

Tailings waters may contain elevated concentrations of metals, process chemicals, acidity, and other constituents that have the potential to impact surface and ground water quality. Applicants must provide water balance information that describes the flow and composition of waters into and out of the tailings impoundment. Modeling may be required. Water balances are discussed in more detail in Appendix A (*Hydrology*) and Appendix E (*Wastewater Management*). Applicants who request an NPDES permitted discharge from the tailings impoundment should provide information on flow and composition and treatment of such discharge. NPDES permitting needs are discussed in the main text of the source book and in Appendix D (*Effluent Characterization*)

4.1.5 Operational Monitoring.

Monitoring of active tailings impoundments should focus on detecting changes in embankment stability, surface and ground water quality, and ground water flow (Table F-4) (see Sengupta, 1993). Embankment stability can be monitored using various geotechnical methods and visual observation. Surface and ground water quality can be monitored by routinely collecting and analyzing samples from upstream and downstream stations. Downstream surface water stations should be located such that they would receive direct discharge from retention ponds, seepage collection sumps, and diversion ditches and at selected downstream confluences. Ground water stations should be located around the perimeter of an impoundment in order to detect changes to ground water flow that might occur as a result of a recharge mound that would form beneath the impoundment (Vick, 1990). All water quality monitoring stations should be sampled on a regular basis and analyzed for a suite of constituents as specified in an approved Sampling and Analysis Plan (see Appendix B*, Receiving Waters*, and Appendix C, *Characterization of Ore, Waste Rock and Tailings).*

Table F-4. Operational Monitoring of Tailings Impoundments

Type of Monitoring	Methods Used	Purpose
Geotechnical	Visual inspection; Soil strength testing; Soil borings; Degree of saturation; Pore water pressure.	Detect changes in slope stability, compaction, and settling that may identify structural weaknesses or signal potential failure of the embankment.
Surface Water	Flow monitoring; Upstream and downstream water quality analyses.	Detect impacts to surface water quality.
Ground Water	Water table monitoring; Upgradient and downgradient water quality analyses	Detect impacts to ground water quality; determine influence of recharge mound on ground water flow.
Ambient air	Visual (opacity), PM-10 monitoring	Detect blowing dust, detect high particulate (particularly important if high arsenic in tailings)
Tailings water and seepage	Flow monitoring, Water quality analysis	Early detection of water quantity and quality changes, potential for acid drainage, detection of process chemicals

Applicants should submit information of the following types to allow full NEPA analyses and informed permitting decisions.

- Description of all monitoring plans, both for operational components as well as potentially affected environments, including frequency, the components to be monitored,

Draft

the parameters to be monitored, and quality assurance/quality control. Table F-4 identifies the types of monitoring.

- Description of strategy and schedule for updating and refining monitoring plans,
- Description of how monitoring data will be used during the active life of the facility,
- Description of contingency plan for responding to various monitoring results, including identification of action levels for each monitored component and parameter (i.e., the level that will trigger further monitoring or some type of other action, including corrective action).

4.2 Dry Tailings Facilities

Dry tailings disposal is a relatively new method of placing tailings that have been dewatered to less than saturation using thickeners, belt filters, and filter presses (Johnson, 1997). Although best suited to dry climates and is most productive where water shortages exist, dry tailings facilities also have been approved in wet climates (e.g., Greens Creek Mine and the Kensington Project in Alaska). Dewatered tailings are transported to the disposal facility via haul trucks, conveyors, or special pumps. The materials are then placed, compacted, and covered. Dry tailings facilities typically are reclaimed concurrent with placement, resulting in less disturbed area at any given time (Johnson, 1997).

In addition, "paste" tailings, which are used extensively to backfill underground mines (see Section 4.4), may be disposed on the surface. According to Norman and Raforth (1998), paste materials have an initial moisture content of approximately 20 weight percent, most of which is held by surface tension in the material matrix. This amount of water is sufficient to permit the material to be pumped, but insufficient to create free-draining water or particle segregation. A few percent of portland cement or fly ash can be added to increase material strength and durability.

A significant advantage to dry tailings management is that the technique reduces the potential for surface and ground water contamination since it eliminates free process water from the pile. Other advantages include the ability to reclaim more process water, the ability to place dry material at locations where wet placement is difficult or impossible. Dry tailings management also may result in less water to treat and discharge, which can be a significant advantage in light of the zero discharge provisions of the NPDES New Source Performance Standards. A disadvantage to this type of management is that the unsaturated and moist condition of the tailings would permit any iron sulfide minerals that are present to oxidize and, potentially, form acidic leachate. Other disadvantages include high unit costs and difficulty in placing materials in wet climates. Saturation of a dry tailings pile by precipitation potentially can lead to slope failures if a facility is not properly designed to accommodate storm events.

As with tailings impoundments, the choice of a dry tailings disposal site is important. General siting criteria are shown in Table F-3. Facilities are most easily located along valley bottoms, on flat plains, or on gently sloping surfaces. Placing dry tailings on hillsides with steep slopes requires larger facility footprints and higher pile heights, and it presents challenges for

draft

access and foundation stability.

The decision to use dry tailings management depends partly on the volume of water required by the process system and the site water balance. For some zero discharge facilities, the use of dry tailings disposal may return too much water continuously to the process system. For example, the water storage and/or evaporative loss components of a tailings impoundment may be important elements of the facility water balance.

If applicants plan to use dry tailings management techniques, they should provide information of the following types to support NEPA analyses and permitting.

- Describe the criteria that was used to determine whether proposed tailings facility sites are technically and economically feasible (see Table F-3). Evaluate the importance of critical factors such as foundation stability, substrate bearing capacity, and groundwater and surface water hydrology. Compare impoundment performance to applicable regulatory requirements.

- Perform stability and liquefaction analyses consistent with State and other regulatory requirements.

- Characterize the physical and chemical properties of the tailings and how they relate to impoundment stability and leachability.

- Describe the rate and total volume of tailings to be dried and managed, means of dewatering the tailings, and wastewater management.

- Description of dry tailings facility—location and topography, site preparation and containment (compaction, berms, liners), long-term configuration, and means of transporting dry tailings to the facility.

- Develop a water balance and predict effluent quantity and quality (including seepage) under normal conditions and under storm scenarios. Describe how seepage, if any, will be collected and managed. See Appendix E.

- Describe facility construction and management, including construction QA/QC, and performance standards necessary to meet applicable regulatory requirements.

- Develop and describe operational and environmental monitoring plans, including contingency plans and action levels. Monitoring similar to that described in Table F-4.

Closure issues are discussed in Section 6, below. Issues related to acid drainage are discussed in Section 7.

4.3 Subaqueous Tailings Disposal

The objective of subaqueous tailings disposal is to maintain a water cover over the

draft

tailings to control oxidation of sulfides, bacterial action, and subsequent acid generation (see Appendix C for discussion on the geochemistry of acid generation). This objective can be accomplished by depositing mine tailings directly into a body of water such as a constructed impoundment, a flooded mine, a freshwater lake, or a marine environment such as a fjord or deep marine channel. Although practiced in other countries, disposal of tailings into lakes and marine environments is not allowed in the United States. For most industry sectors, NPDES effluent limitation guidelines prohibit process water discharges to waters of the U.S., including both fresh and marine waters. Effluent limitation guidelines also limit the discharge of total suspended solids. For these reasons , disposal of tailings into lakes or marine environment is not discussed in this Appendix. Instead, the Appendix focuses on the use of water covers in engineered impoundments and disposal into flooded mine workings.

Subaqueous tailings disposal controls acid generation by limiting available oxygen for the oxidation process, thereby controlling acid generation; eliminating surface erosion and dust problems caused by wind and water action on tailings placed in a depositional basin, and; creating a reducing environment, suitable for supporting sulphate and nitrate reducing micro-organisms in sediments, in which soluble metals are precipitated as sulfides and ammonia is generated by the reduction of nitrates. The physical and chemical stability of the tailings materials are controlled by the oxidation, reduction, and diffusion kinetics in sediments; interactions with the overlying water column; and tailings transport related to wave induced turbulent motion.

4.3.1 Water Covers over Constructed Impoundments.

Disposal of tailings into engineered impoundments where a permanent water cover is maintained is a relatively new concept that presents a number of practical difficulties. These facilities would require some sort of perpetual maintenance to ensure a permanent water cover and continued structural integrity of embankments and dikes. In addition, these facilities would require a permanent and regular water supply and a minimum water depth to maintain anaerobic conditions at the bottom.

The advantages of using underwater disposal in a constructed impoundment include the ability to mitigate the production and release of acid drainage and lower implementation costs compared to the costs of a soil cover. Disadvantages include heightened potential for embankment failure due to seismic events or erosion due to additional liquid in the impoundment compared to conventional tailings impoundments; the displacement of resources (e.g., habitat, vegetation, etc.) at the location of the tailings impoundment; the potential inability to keep tailings flooded and maintain anaerobic conditions; and the potential release of metals present in pore water solutions or in soluble mineral phases. Many of these disadvantages may be more difficult to overcome in impoundments that are not designed for permanent water retention (i.e., whose design is modified after initial construction).

Subaqueous tailings disposal in constructed impoundments has been evaluated at two mines in Canada. At the Highland Copper Mine, British Columbia., a tailings impoundment was flooded and monitored to evaluate the efficiency of the subaqueous disposal technique (Scott and Lo, 1992). At the Fault Lake Mine, Falconbridge, Ontario, test plots of saturated tailings were developed and evaluated to determine the effectiveness of various test scenarios.

draft

Design and operational issues that should be analyzed for NEPA disclosure and permitting relating to water covers include:

- The issues discussed in Section 4.1 for the siting, design, operations, and monitoring of tailings impoundments also apply to constructed underwater disposal impoundments (e.g., characterization of tailings, stability evaluation, water balance, monitoring plans, etc.). Additional issues specific to water covers include:

- Designs must demonstrate that the tailings will be maintained in an anaerobic state to prevent sulfide oxidation and that the tailings will be placed below the level of wave action to prevent redistribution.,

- Impacts to the aquatic environment must be evaluated,

- Operating and monitoring plan, including monitoring to ensure that tailings remain saturated.

- Issues associated with the long-term maintenance need to continue saturation after closure.

4.3.2 Disposal into Flooded Mine Workings.

Tailings can be disposed of in the subaqueous environment provided by flooded underground and surface mine workings. Placement is accomplished through sluicing to fill mine stopes, adits, shafts, and pits. Tailings may be mixed with inert materials, such as cement or sand or fly ash, to add structural integrity.

The U.S. Bureau of Mines studied metal dissolution from mine tailings that were placed underground as backfill in a flooded mine shaft (Levens and Boldt, 1993). Computer simulations based on sample data collected during these studies indicated that metals release from the backfill after flooding was expected to be low due to reduced rates of sulfide oxidation and to buffering capacity provided by carbonate minerals.

The disposal of tailings in flooded mine workings offers advantages over standard tailings impoundments that include placing mine wastes into a comparatively stable environment; eliminating the potential for tailings dam failure and the need to maintain a facility during post-closure; and reducing visual impacts and land surface disturbance. Disadvantages include the potential for chemical transformations to create less stable minerals after placement and the hydraulic conductivity of uncemented tailings which is likely to be higher than that of the surrounding rock. The latter may result in the formation of preferential ground water pathways that enhance the potential for leaching of backfilled material (Levens and Boldt, 1993). It is also important to coordinate backfilling with mine planning.

Issues associated with disposal in flooded pits or underground workings that should be evaluated for NEPA analyses include:

draft

- Describe the disposal operations and closure, including: timing and amounts of tailings proposed for disposal; means of transporting the tailings to the backfill site; if material is to be stabilized or otherwise treated, description of additives and treatment process.

- Characterization of the backfill tailings and any additives.

- Demonstrating the structural integrity and physical consistency of the backfill material.

- Characterizing geochemical effects of tailings solids and fluids on the quality of ground water or pit lakes, including results from any necessary modeling.

- Characterizing any predicted discharges to ground water or surface water.

- Conducting rigorous hydrogeological and limnological studies to ensure that workings will remain continuously flooded.

- Developing a monitoring plan for operational and post-closure periods to verify predictions and allow detection of the need for changes or corrective actions.

4.4 Mine Backfill

Tailings materials can be used to backfill underground mines. In this setting, they are used to provide a working floor, provide wall and roof support and stability, maximize ore recovery, minimize surface subsidence, and aid ventilation control (Vick, 1990; Johnson, 1997). Because most backfill applications require material with high permeability (to permit dewatering) and low compressibility, generally only the sand fraction of tailings are used in these operations and slimes still require an alternative disposal method (Vick, 1990). Tailings are delivered underground using hydraulic systems or, if the tailings have been dewatered to “paste,” using positive displacement pumps (Johnson, 1997). Slurried tailings (60 to 75 percent solids) dewater underground and require drainage control to ensure that fluids are handled in a manner that is environmentally acceptable. Paste backfills (80 percent solids) offer lower permeability and can be used to restrict underground water flow (Johnson, 1997). Although paste backfills introduce less water underground, water extracted during the filtering operation requires environmentally acceptable disposal (Johnson, 1997). In some cases, tailings may be augmented with cement or fly ash to provide additional stability and/or alkalinity.

Issues associated with the disposal of tailings as backfill that should be analyzed for NEPA disclosure include:

- Describe the backfill operations and closure, including: timing and amounts of material proposed for backfilling; means of transporting the material to the backfill site; if material is to be stabilized or otherwise treated, description of additives and treatment process.

- Characterization of the backfill tailings (e.g., particle size, chemical and physical characteristics), including the effects of additives such as cement or fly ash.

- Predict the structural stability of backfill material and enclosing mine rock.

- Determine/predict the potential reactivity (particularly acid generation potential) of backfill material (tailings and any additives) and enclosing mine rock. This would involve laboratory testing, modeling, and other methods, as described in Appendix C.

Prediction of water quality in the mine and whether a discharge is needed in order to determine potential impacts to ground water and surface water and to design appropriate controls.

- Description of monitoring program to be used to verify predictions and allow detection of the need for changes.

Issues associated with acid generation is discussed further in Section 7 of this Appendix and in Appendix C.

5.0 SPENT ORE/HEAP AND DUMP LEACH MANAGEMENT

Although the purpose of heap leach pads and dumps is to recover metals, these facilities cross into the realm of waste management upon closure (Hutchinson and Ellison, 1991). Mines presently use three types of heap leach facilities (Hutchinson and Ellison, 1991). Reusable pads (also termed "on-off" pads) are designed for continual reuse, with spent ore materials removed and transported to a separate disposal facility at the end of the leach cycle; fresh ore is replaced on the pad for a new leach cycle. Dedicated or permanent expanding pads are engineered facilities designed for a single use, with spent ore remaining in place at the end of the leach cycle; fresh ore is placed on newly constructed portions of the pad. Valley leach facilities are constructed in a natural stream valley, with ore contained on the downstream side by an embankment; they are operated in a manner generally similar to dedicated pads. In part, the choice of a facility type is dictated by site topography, geotechnical considerations, and the mineralogy and metallurgical characteristics of the ore materials. In some cases, ore is leached in vats or tanks rather than in open heaps; in such cases, the spent ore is generally disposed in a manner similar to that used by on-off pads or in a manner similar to that used for conventional tailings (see Section 4 above).

Process solutions have the ability to degrade surface and ground waters should they escape from leach pads and solution storage and conveyance systems. For most facilities, solution containment is achieved through the use of impermeable liners beneath leach pads, sumps, and pregnant and barren solution ponds, and dual-wall piping. Hutchinson and Ellison (1991) describe the types of natural and synthetic liners that are commonly used for these purposes. Regardless of the type of system that would be used, leach pads, solution storage ponds, and solution conveyance systems will need to designed to accommodate the added volume of water that occurs during low probability storm events. This makes performing a rigorous analysis of the predicted water balance crucial to project design. Wastewater management issues are discussed in more detail in Appendix E.

Many of the criteria for choosing the locations of waste rock dumps and tailings impoundments also apply to the locations of heap leach facilities. Primary among these are

Draft

economic factors such as haulage distance and geotechnical concerns such as foundation stability and liner integrity. The types of technical data that may be required for locating a suitable site are summarized in Table F-5.

Table F-5. Data Needs for Heap Leach Facilities

Critical Design Factor	Data Needs	Data Source/Methodologies
Facility Site Selection	Topography	Topographical maps, Aerial photos
	Geology and Soils, including fault mapping	Geological maps, Engineering tests of site samples.
	Seismicity (natural and blasting-induced)	Geological maps, Seismic zone maps, Uniform Building Code (U.S. ACE, 1995), Mine Plan of Operation, Engineering tests of site samples.
	Surface Water Hydrology	See Appendix A
	Ground Water Hydrogeology	See Appendix A
	Baseline Water Quality	See Appendix B
	Operational Considerations	Mine Plan of Operation
Process Solution System	Leaching and Processing Operations	Mine Plan of Operation
	Facility Water Balance	See Appendix A
Pile/Dump Construction	Foundation and Embankment Stability	Geotechnical and engineering tests of site soil samples.
	Pile Stability	Geotechnical and engineering tests of ore materials.
	Surface Water Diversion	See Appendix H
	Seepage/run-off Collection and/or Liner	Model results, Meteorological data; See Sections 4.1.4, 4.1.5, 6.5

Spent ore that is removed from a reusable pad, or spent ore removed from vats or tanks, will require disposal in a separate facility. The manner of disposal will be governed by the likelihood that these materials could impact surface or ground water quality by releasing metals, acidity, process chemicals, or other constituents. Consequently, the potential for water quality impacts is expected to be a function primarily of the mineralogy of the spent materials and the completeness of rinsing and process chemical neutralization actions (see Section 6.6). Spent materials that are unlikely to have deleterious effects could be disposed of with other waste rock materials; those expected to contribute to poor water quality may require special handling or disposal (e.g., encapsulation).

Issues associated with heap management that should be analyzed for NEPA disclosure and permitting include:

- Describe the criteria used to determine whether proposed heap sites and designs are technically and economically feasible and how they fulfill regulatory requirements. Many of the criteria will be similar to that discussed for siting waste rock dumps and tailings

draft

impoundments. Table F-5 lists some of the critical criteria.

- Characterize the physical and chemical properties of the heap material and how they relate to heap stability and leachability (see Appendix C).

- Prepare a water balance and predict the potential for seepage and run-off from the heap in order to design appropriate wastewater management. Various models are available to facilitate this. Where modeling is used, all model assumptions, input parameters, and uncertainties should be disclosed and a sensitivity analysis may be necessary. Wastewater management is discussed in Appendix E.

- Describe how the heap will be constructed and managed during operations and closure in terms of maintaining heap stability and reducing impacts to the environment. Develop performance standards and compare to any applicable regulatory requirements (e.g., predict liner performance). Additional closure considerations are discussed in Section 6 of this appendix.

- Develop and describe operational and environmental monitoring plans to ensure heap stability and predict impacts to surface and ground water quality. Table F-2 identifies types of monitoring that may be required. Monitoring plans should include action levels and contingency plans .

- For disposal units for spent ore from on-off pads and from vats and tanks, provide similar information on unit design and performance, including performance following closure and abandonment.

6.0 ISSUES RELATED TO CLOSURE AND RECLAMATION

Closure and reclamation of permanent waste disposal facilities should be directed toward preventing future impacts from these sites. Primary considerations center on creating physically and chemically stable facilities that will not impact surface and ground water resources through erosion, runoff, seepage, or windblown dust (Hutchinson and Ellison, 1991). Over the long-term, the stability of facilities such as waste rock dumps and spent leach piles depends on factors such as the build-up of pore water pressure within the pile, erosion during high intensity precipitation events, slope angle, and the presence of internal weaknesses (e.g., inclined layering) within the pile. In addition to those produced by sluicing practices, internal weaknesses may be produced in tailings piles by sulfide oxidation, which creates hardpan layers that restrict precipitation infiltration (Blowes et al., 1991).

This section briefly describes aspects of closure and reclamation and associated analyses that should be performed for permitting and NEPA analyses. The reader is referred to Section 7.0 for more detailed descriptions of techniques to control the formation and migration of acidic drainage. Appendix H, *Erosion and Sedimentation* provides a more complete discussion of runoff and sediment transport control.

draft

6.1 Soils Placement and Revegetation

An understanding of soil resources can help applicants to establish realistic goals for revegetation success and increase the likelihood of achieving those goals. Most mining activities directly impact soils. The actions of stripping and replacing topsoil and overburden disrupt the horizons that produce a soil's physical and chemical characteristics and often inverts them in the process of creating stockpiles. These actions also lead to soil compaction. However, even where soils are not stripped, the operation of heavy equipment causes compaction that can significantly reduce soil productivity (Ellis and Mellor, 1995). Compaction reduces pore space within a soil which decreases the infiltration of water and air. Soil porosity is critical to maintaining the types of biological activity that produce a healthy soil.

If there is a single key to reclamation success, it is the need to maintain or reestablish biological activity within the soils or the growth material serving as soil. Soil structure, moisture holding capacity, nutrients/pH, and stability are all critical to reclamation success.
The biological activities occurring within soils are key contributors to plant-soil interactions. Micro- and macroorganisms within the soil conduct all of the important soil-building processes, such as the decomposition of organic material and nutrient cycling (Ellis and Mellor, 1995). Biological activity typically is lost when soils are stockpiled for a period of time. One handling technique that maintains biological activity is to directly haul topsoil from an area to be stripped to an area undergoing reclamation (Sengupta, 1993). This approach, also termed 'live hauling', can enhance revegetation efforts by maintaining a viable seed bank of indigenous species. Live hauling is only practical where concurrent reclamation is being employed; in settings where live hauling is not possible, islands of native plant material and soil can be transplanted into newly reclaimed areas to serve as propagule sources for important soil organisms. Windblown propagules can be collected using snow fences (Reeves and Redente, 1991).

A number of reclamation options are available to operators, including directly seeding waste piles or covering them with topsoil or growth media prior to seeding. Where soil resources are limited, waste materials should be analyzed for their suitability as plant growth media. Based on analytical results, amendments may be incorporated to improve fertility or texture (e.g., Munshower, 1997). In such cases, amendments can be either chemical fertilizers or organic mulches such as paper, wood chips, straw, hay, manure or compost which are tilled into the upper portion of the soil. Many soils, particularly in the western U.S., have limited phosphorus contents and require fertilization. However, the addition of a nitrogen-rich fertilizer requires thorough consideration because the addition of nitrogen to native soils has been shown to influence the species composition at reclamation sites and may predispose a site to invasion by weedy species adapted to such a nutrient-rich regime. In some cases, successful nitrogen additions have been made after plants have had two to three years to become established (Peterson et al., 1991). Seed mixtures should be developed based on the type of soil being placed on the site. While the long-term reclamation goals may reflect a later successional stage, reclamation plans should acknowledge the limitations that 'new' soils may impose on the establishment of new vegetation.

Reclaiming a large facility (e.g., a tailings impoundment) typically requires that a site have significant soil resources so that a suitable growth medium can be placed. For mines that are situated in arid or mountainous terrains with limited soil resources, this may be problematic.

draft

In these areas and in others where soils may need supplements, operators have used biosolids (i.e., sanitary sewage sludge), wood chips, and other means of increasing organic matter in soil. Recent studies have shown that cattle grazing can provide an innovative, effective, and cost-competitive option for reclaiming fine-grained materials (i.e., tailings). In Miami, Arizona, penned cattle helped to establish growth media on abandoned tailings by trampling hay mulch, urine, and manure into the upper tailings layer (Norman and Raforth, 1998). In addition, cattle helped to minimize erosion by creating sidehill terraces and pathways and to establish seed germination areas in hoof depressions.

6.2 Runoff and Erosion Control

The long-term control of sediment erosion and redeposition is an important aspect of protecting water quality and aquatic resources. Runoff and erosion control typically is achieved through grading, surface diversion, revegetation, and armoring in accordance with Best Management Practices (BMPs) established by the operator. Predicting and controlling runoff and erosion is discussed in detail in Appendix H, *Erosion and Sedimentation*.

Grading and recontouring waste rock dumps and decommissioned heap leach piles typically is intended to provide stable slopes that will not avalanche or erode. Grading and recontouring techniques can be used to create benches or other features that reduce gully and rill formation on sloping surfaces and to guide precipitation runoff to engineered swales or other conveyance structures. In general, tailings are not regraded (although embankment faces may be). More often, long-term diversions or conveyance structures are constructed around or even across tailings facilities to control erosion

In most cases, runoff from a disposal facility (whether from dumps, piles, tailings embankments, or flow around or over impoundments) is routed to a sediment control structure as described in Appendix H, *Erosion and Sedimentation*. Surface water diversions are used to direct up-gradient flows around or across a facility in order to prevent erosion of waste materials and the embankments that contain them. Storm event planning is key in designing diversion structures. Runoff control structures, including conveyance structures and detention basins, that were initially sized and constructed to meet design life guidelines, may require reconstruction to convey or detain flows that result from low probability precipitation events (e.g., 100 or 500 year events). This may require measures to stabilize the beds and banks of ditches (e.g., with rip-rap), increase the size of diversion structures and sediment detention ponds, or raise the height of tailings embankments to prevent storm water overflow. Closure requirements will likely be site-specific and intended to promote long-term drainage control.

As described in Section 6.1, revegetation typically requires the addition of soil amendments or the placement of topsoil or other growth media to provide a suitable substrate for plant growth. Establishing vegetation on waste facilities lessens infiltration and decreases the potential for erosion by diminishing rainwater impact and providing soil cohesion. Surface armoring is intended to cover fine-grained, easily eroded materials such as tailings with more resistant, coarse-grained rock.

6.3 Infiltration Control

Draft

Infiltration control is used to minimize the amount of meteoric water that enters a waste disposal facility. These measures can help to stabilize facilities by maintaining low pore water pressures and decreasing the potential for water quality impacts by reducing seepage quantities and limiting oxygen diffusion. Requirements for infiltration control depend on climatic conditions and the characteristics of the materials contained in a given disposal facility. Facilities situated in arid climates or that contain non-reactive materials may not require infiltration controls at closure.

Infiltration control typically is achieved through the use of impermeable caps, seals, and capillary barriers, by establishing vegetation, and by recontouring facility surfaces. Caps and seals may be composed of clay or other natural materials that are compacted to an acceptably low permeability or a variety of synthetic materials such as PVC, HDPE, or asphalt and concrete mixes. Compacted natural soils are effective at controlling water infiltration and are unlikely to suffer long-term degradation. Similarly, clay caps can control water infiltration. Although synthetic membrane covers may offer superior short-term performance, they can suffer long-term degradation through the loss of plasticity, cracking, or tearing under differential settling (Sengupta, 1993). Surface sealants such as shotcrete or asphalt provide more robust alternatives to membrane covers. Capillary barriers can have a variety of designs (Hutchinson and Ellison, 1991). In general, they consist of a vegetated soil layer that overlies a coarse drainage layer that is, in turn, underlain by a low permeability cover or low permeability wastes (Figure F-3) (Hutchinson and Ellison, 1991). They are designed to intercept infiltration penetrating the soil layer and divert it from the surface of the waste disposal facility. Vegetation will take up moisture that falls onto the surface of a disposal facility and minimize that which will infiltrate (see Section 6.1). Infiltration also can be decreased by grading facility surfaces to eliminate ponding and promote runoff (see Section 6.2).

6.4 Seepage Control

Seepage control may be needed for certain facilities upon closure. Requirements for seepage control are likely to differ significantly for waste management facilities in arid and humid climates (Hutchinson and Ellison, 1991). In general, seepage can result from infiltrating precipitation or snowmelt that percolates through a facility, the flow of surface or ground waters through a facility, or from the release of pore waters upon dewatering and consolidation of tailings.

Seepage control from waste disposal facilities can be achieved through the use of impermeable liners and systems that are engineered to collect seepage and route it to treatment facilities. Typically, these systems are designed to work in concert with runoff and infiltration control systems. Types of seepage collection systems include sumps, ditches, drains, and ground water interception wells (Hutchinson and Ellison, 1991). Seepage conveyance systems at closure may need to be designed to accommodate increased seepage and runoff that could result from low probability storm events. Poor quality seepage may need to be routed to a treatment facility prior to its discharge to surface waters. These facilities can be in the form of active or passive treatment systems (see Appendix E, *Wastewater Treatment*).

draft

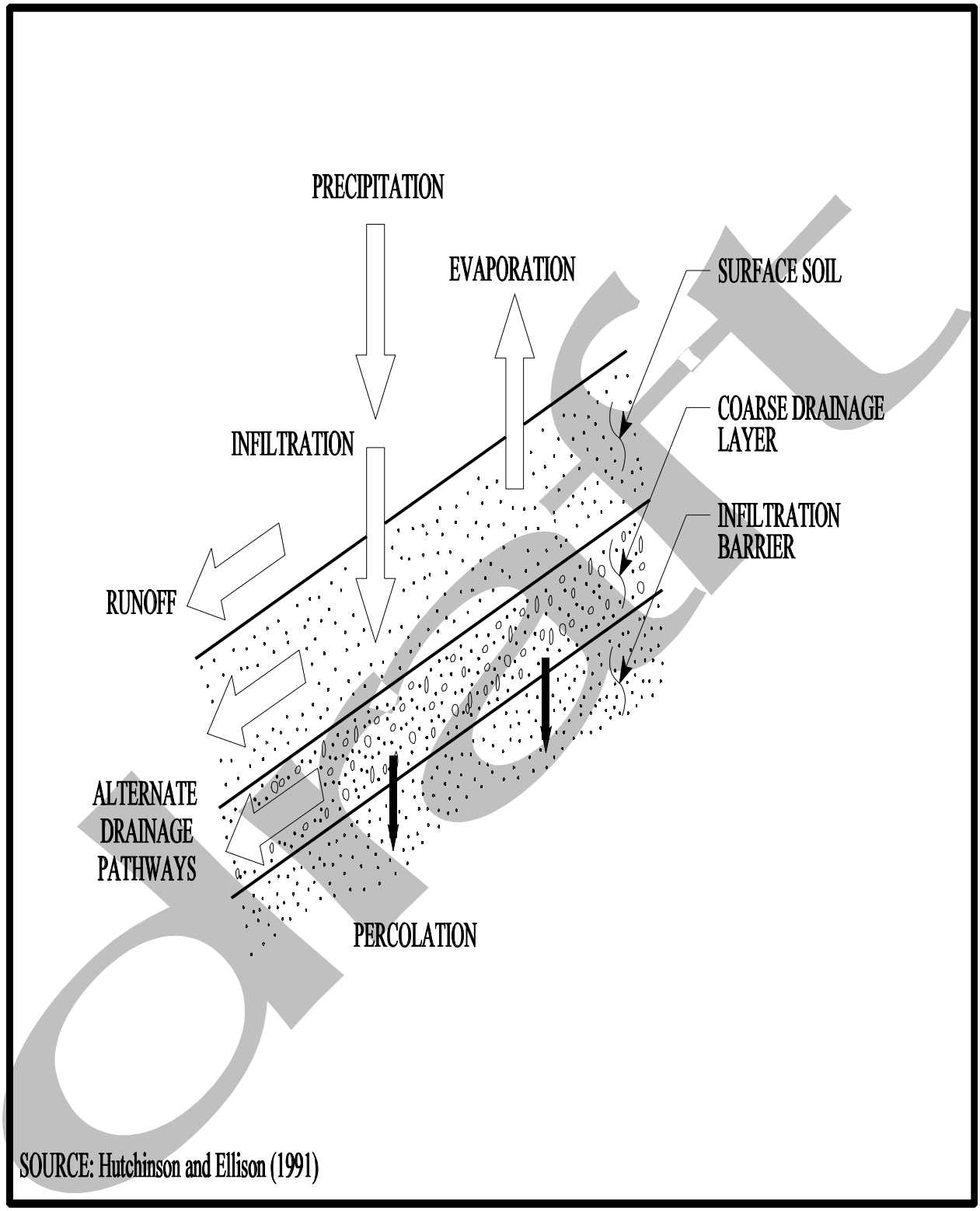

Figure F-3. Layered Waste System.

6.5 Other Considerations

The potential deleterious effects of highly reactive wastes (for example, materials with a net acid generating potential) can be lessened by installing covers materials that limit oxygen diffusion into waste facilities (e.g., Sengupta, 1993). Water covers are effective oxygen barriers, but require maintenance to assure they remain intact. In addition, the use of water covers require that the original impoundment structure be designed to maintain such covers. Synthetic membranes such as PVC and HDPE provide effective oxygen control but may suffer puncture or long-term degradation. While compacted soil covers offer limited oxygen control, saturated soils may preclude significant oxygen diffusion (Sengupta, 1993).

The control of windblown dust may be an issue for tailings and other fine-grained waste materials. Dust can be suppressed by maintaining a water cover over tailings materials, placing natural or synthetic covers, or promoting vegetative growth. The use of waste rock as a cover for tailings should be thoroughly investigated to ensure that the tailings materials possess sufficient strength to support the waste rock load (see Section 3.4).

In some cases, facilities may be recontoured to blend with existing topography and reduce visual impact. While coal mining regulations require that spoil piles and pits be regraded to approximate original topography, there is no such requirement for non-coal mines. However, permits may require that any facilities remaining upon closure be consistent with the surrounding topography and support the approved post mining land use(s).

6.6 Spent Ore Treatment and Neutralization

Spent ore materials may occur in the form of processed heap and leach facilities or tailings materials. Pore waters and soluble metal compounds that remain in closed acid and cyanide heap leach facilities or in tailings from cyanide leaching can be mobilized by infiltrating rainwater. To prevent chemical releases to the environment, leached materials may require rinsing and neutralization to remove potentially deleterious compounds prior to facility closure. In general, this can be accomplished by:

- Applying a neutral rinse solution to remove constituents from the processed material, then collecting and treating the solution; piles are rinsed until effluent concentrations reach pre-determined acceptable levels.
- Applying a rinse solution containing chemical or biological agents that neutralize or chemically decompose constituents of concern *in situ.*

In situ heap rinsing requires that piles have sufficient permeability to permit neutralizing fluids to penetrate through and contact all materials within them. Piles with insufficient permeability or with highly variable permeability or fluid flow pathways may need to be dismantled and treated in smaller batches (EPA, 1994b). Climate can play a significant role in determining the length of time required for complete neutralization. For example, cold weather may slow or halt biological breakdown of cyanide. Experience has shown that initial treatment may produce effluent that meets constituent guidelines, but that effluent quality may degrade after treatment stops (EPA, 1994b). Thus, some facilities may require repeated treatment until

draft

effluent quality remains at acceptable levels.

Li et al. (1996) describe lab and pilot-scale experiments designed to determine the appropriate methods to rinse and neutralize an acid leach pile. Their results demonstrated that decommissioning tests should use large diameter columns or field-scale test piles to determine rinsing times, solution application rates, and decommissioning costs. These experiments also showed that precipitation and dissolution of secondary minerals controls the metals content of the rinse effluent. Rinsing duration depends on the volume of the leached materials in the pile, their mineralogical and chemical characteristics, and physical factors such as permeability, porosity, and precipitation. Accelerated artificial rinsing, in which neutralizing solutions (e.g., calcium hydroxide) are applied using the leach solution system, can effectively remove acidity and soluble metals from a large heap leach pile in a reasonable period of time.

There are a variety of techniques that can be used to chemically or biologically breakdown residual cyanide and metal-cyanide complexes in heap leach and tailings facilities (EPA, 1994b summarizes these techniques; see also Appendix E, *Wastewater Treatment*). Some of these methods produce by-product ammonia or nitrate that may require additional treatment in effluent waters. In general, chemical or biological agents can be applied to leach piles using the leach solution system. Rinsing continues until the cyanide content of seepage from the pile reaches an acceptable level. Processed tailings from circuits using agitation leaching typically are treated prior to discharge to a tailings impoundment.

It should be noted that rinsing heaps, while effective in reducing cyanide, can mobilize other metals (notably, selenium, mercury, and arsenic) to the point that rinsate or leachate will not meet regulatory standards for discharge without treatment of the rinsate as well as future leachate from infiltration. It also is important to note that other closure issues discussed in this section (run-off and erosion control, infiltration and seepage control, soils placement and vegetation, and post-closure monitoring, are important considerations following neutralization of spent heaps.

6.7 Post-Closure Monitoring

Post-closure monitoring is conducted to ensure long-term protection of the environment and to identify any problems in the early stages of their development. Depending on the facilities and methods of closure employed, post-closure monitoring may include visual inspections of site conditions, evaluations of embankment integrity, surface and ground water quality monitoring, determinations of available capacity in sediment retention structures, assessments of the performance of stream diversions, seepage collection, and seepage treatment systems, and the success and progress of reclamation activities. For each type of monitoring conducted, there should be clear action levels that trigger specific responses (which could include such things as heightened monitoring, notification of authorities, correction action). These responses should be clearly laid out in contingency plans that describe the actions that have to take place when an action level is reached or exceeded. The types of monitoring that are required, the schedule by which they are conducted, and the parties that are responsible for conducting monitoring activities will depend on site-specific conditions and requirements.

6.8 Information and Analytical Needs

Issues associated with closure and reclamation that should be analyzed for NEPA disclosure and permitting include:

- Describe closure and reclamation techniques and timing. Develop performance standards for reclamation measures. The performance standards should be consistent with regulatory requirements and also provide for long-term stability (chemical and physical).

- Describe any performance bonds or other financial assurance that may be provided to authorities as potential mitigation for impacts, the means of calculating the amount provided, and the conditions and timing of release.

- Develop a long-term water balance, including prediction of run-off and seepage under low probability conditions.

- Predict the short- and long-term effectiveness of infiltration controls, seepage controls, revegetation, and other stability and water controls. Lab tests and field test plots may be used to evaluate cover effectiveness and revegetation. Modeling may be required to predict long-term impacts of weathering.

- Describe any treatment and neutralization of wastewater, spent ore, or tailings prior to site abandonment, including verification testing.

- Describe all monitoring that is proposed at various stages of reclamation and closure and afterward, including QA/QC, action levels and contingency plans. Section 6.7 describes the types of monitoring that may be needed.

7.0 ACID MINE DRAINAGE

Acid mine drainage (AMD) may often represent the greatest environmental concern at mining sites. All of the mining solid wastes discussed in this appendix may be potential sources of AMD. Measures to control and mitigate AMD production from solid mining wastes are briefly discussed in this section. Management and treatment of AMD wastewaters is discussed in Appendix E. The chemistry of AMD production is described briefly here and is described in detail in many of the references provided in this section.

AMD occurs when sulfide-bearing mine wastes and materials react with meteoric water and atmospheric oxygen to produce sulfuric acid. The most reactive sulfide phases are the iron sulfide minerals pyrite, marcasite, and pyrrhotite. Nordstrom et al. (1979) summarize the pyrite oxidation process. In the initial stages of acid formation, pyrite reacts with water and oxygen to form ferrous iron and sulfuric acid. Ferrous iron is slowly oxidized to ferric iron by oxygen. As pH decreases below 4.5, ferric iron also begins to oxidize pyrite and it becomes the primary oxidant at pH values below 3.0. Iron oxidizing bacteria (e.g., *T. ferrooxidans*) greatly accelerate the oxidation of ferrous iron to ferric iron and serve to catalyze pyrite oxidation at low pH. When this occurs, the presence of oxygen has little effect on the rate at which pyrite oxidizes to form acid. Acid generation at low pH is controlled by bacterially mediated ferric iron oxidation

(Singer and Stumm, 1970; Nordstrom et al., 1979).

AMD can be initiated from any pyrite-bearing mine material that is exposed to air and water. This includes ore piles, overburden and waste rock dumps, tailings impoundments, pit walls, underground workings, and spent ore heaps. Appendix C describes tests that can be performed on tailings, waste rock, etc. to determine their acid generating potential. To the greatest extent possible, new facilities should seek to prevent acid drainage rather than treat or abate AMD after it forms.

7.1 Controlling the Acid Generation Process

Acid generation can be controlled by regulating one or more of the primary reaction components (pyrite, oxygen, water) or the catalyst (bacteria). Control can be achieved by removing pyrite from materials and wastes or precluding interactions between the solid materials and oxygen, water, or bacteria. The process can be slowed by using bactericides or eliminating the environmental conditions that sustain bacterial populations.

Pyrite can be removed from mining wastes and materials by processing. The most common procedure produces a sulfide-rich metal concentrate through flotation, which then can be handled separately (SRK et al., 1989). Although flotation can be utilized at mines where it is part of the beneficiation scheme, it is neither a practical nor cost-effective solution for treating pyritic overburden or waste materials, subeconomic underground workings, or pit walls that contain pyrite.

At any stage of the acid generation process, water (or moisture) and air are required for acid production. Removing either or both of these reactants from the site of acid generation will diminish acid production (SRK et al., 1989; Environment Australia, 1997). Low permeability covers and seals are widely used to accomplish this task. *Capillary soil barriers* are engineered covers that have a compacted, low permeability layer (generally clay) that is interlayered with more permeable materials (typically sand) which serve as evaporation barriers. Erosion control is achieved by covering the soil barrier with gravel. Capillary soil barriers have proven effective in excluding oxygen and precipitation from mine wastes and materials (greater than 90 percent exclusion) and are an effective AMD control agent (Groupe de Recherche, 1991; Robertson and Barton-Bridges, 1992; Bell et al., 1994; Yanful et al., 1994; Ziemkiewicz and Skousen, 1996a). *Synthetic barriers* also are effective control agents, but are less widely used because of their high cost. Synthetic barriers typically are PVC or HDPE liners placed over acid-generating materials and protected with a cover of soil or rock (SRK et al., 1989; Ziemkiewicz and Skousen, 1996a).

Oxygen can be excluded from mine materials and wastes by submerging them under water (SRK et al., 1989). Although water contains a small amount of dissolved oxygen, it is present in amounts insufficient to oxidize pyrite. Mine materials can be submerged by depositing them in a constructed water body, depositing them in a flooded mine pit or underground working, or depositing them on a specially prepared surface where they are naturally saturated by perched water (Broughton and Robertson, 1992). Subaqueous tailings disposal, which has been used successfully at several mine sites (Dave, 1993; Dave and Vivyurka, 1994; Fraser and Robertson, 1994; ; Environment Australia, 1997), is discussed in greater detail in Section 4.3.

draft

At advanced stages of the acid-generation process, bacterial oxidation of ferrous iron catalyzes acid generation. Consequently, controlling bacterial populations can provide immediate control of acid generation. Anionic surfactants (e.g., sodium lauryl sulfate; Kleinmann et al., 1981), which typically have liquid formulations, can be sprayed onto potentially acid-generating materials prior to or during disposal (Parisi et al., 1994). Because these compounds eventually decompose or leach from treated materials, they must be reapplied periodically and are not a permanent solution to the AMD problem (Ziemkiewicz and Skousen, 1996a). However, slow-release formulations (sorbates and benzoates; Erickson et al., 1985) are available and have proven useful (Splittorf and Rastogi, 1995). Bactericides are most effective when applied to fresh, unoxidized pyritic materials and can be a useful tool when used in combination with other control methods (Ziemkiewicz and Skousen, 1996a).

7.2 Moderating the Effects of Acid Generation

The effects of acid generation can be moderated by neutralizing any acid that is generated before it can migrate from a disposal site. Neutralization can occur as a result of natural conditions, but commonly it is spurred by chemical amendments applied directly to the wastes and materials prior to or during disposal or added to the cover materials that are placed following disposal. When amendments are added to the waste materials, neutralization occurs within the pile near the site of acid generation. In contrast, amendments added to cover materials supply alkalinity to meteoric water that infiltrates the material pile and neutralizes acidity. Where mine materials include both acid-generating and net neutralizing solids, special handling and construction practices can be used to mitigate acid generation. Acid migration from underground workings can be reduced or prevented by backfilling and sealing mine portals.

Several types of alkaline amendments can be used at mine sites (SRK et al., 1989; Ziemkiewicz and Skousen, 1996a, b; Environment Australia, 1997). *Limestone* (calcium carbonate), which lacks cementing capability, is inexpensive, readily available, safe, effective, and easy to handle. *Fluidized bed combustion ash* is a mix of coal ash, lime (calcium oxide), and gypsum (hydrous calcium sulfate) that reacts quickly and hardens into a cement upon wetting. *Kiln dust* from cement and lime kilns is a mix of unreacted limestone, lime, and ash that is highly reactive, absorbs moisture, and has cementing abilities. *Steel slags* also have high calcium oxide contents but also may have high concentrations of trace metals which make them less suitable for widespread use. *Phosphate rock*, which will react with ferrous iron to form insoluble coatings on pyrite, is more expensive than the other amendments listed above.

The amount of alkaline material that must be added to wastes and materials prior to their disposal can be estimated from acid-base accounting tests of the disposed materials (see Appendix C) and of the amendment. A cost-effective control strategy can be determined during pre-mining planning when different disposal options can be tested. In theory, amendments should be thoroughly admixed with mining materials prior to disposal to maximize their chemical effectiveness. In practice, however, this may require repeated handling of the materials which may not be cost effective. Consequently, it is common for amendments to be interlayered with mine materials (termed *layered base amendments*). As described below, the construction of piles that include heterogeneously distributed, layered base amendments is critical to their success.

draft

The construction of waste and material piles plays a significant role in determining whether mixed acid-forming and acid-neutralizing materials will generate acid mine drainage. The formation, storage, and flushing of acid products in a rock or tailings pile depends on flow paths within the pile, flushing rates through different parts of the pile, the distribution of acid-generating and acid-neutralizing materials, and localized physical and chemical conditions (Robertson and Barton-Bridges, 1992). Consequently, it is possible for rock piles with net neutralizing character to develop areas of acid generation. Regardless of the amount of neutralizing material contained within a rock pile, acid generated within the pile will not be neutralized if it percolates along a flow path that does not encounter alkaline materials (Ziemkiewicz and Skousen, 1996b). Although hydrologic modeling of waste rock piles is still a developing science (Robertson and Barton-Bridges, 1992), it is possible to design and construct waste piles with internal drainage characteristics that route leachate to locations where it will be neutralized.

Acid generation from underground mine workings can be moderated by several methods. In cases where workings extend below the water table, sealing mine portals allow the workings to flood, excluding oxygen and prohibiting acid generation (Kim et al., 1982). Alternatively, workings can be backfilled with alkaline materials (e.g., as slurries) that will neutralize acid generated underground (Ziemkiewicz and Skousen, 1996a).

7.3 Controlling the Migration of Acid Mine Drainage

In cases where acid generation is not prevented, then AMD must be controlled by preventing its migration to the environment. Because water is the dominant transport medium, controlling water exit pays few dividends. Consequently, control technology focuses on preventing water entry to the AMD source (SRK et al., 1989). Surface water entry can be controlled using diversion ditches and berms and locating disposal facilities in areas with low runoff. Ground water entry can be controlled using grout curtains or other seepage control devices, avoiding areas of ground water discharge, and installing synthetic or compacted soil liners. Infiltration can be controlled using surface covers and drainage control features. These features are described in Sections 6.2 to 6.5.

7.4 Collecting and Treating Acid Mine Drainage

Acid mine drainage that discharges to surface waters or infiltrates to ground waters from waste piles, tailings impoundments, underground workings, or mine pits must be collected and treated. Collection typically is accomplished using ditches, trenches, shallow wells, cut-off walls, and pumps (SRK et al., 1989). Treatment is accomplished by several methods that fall into the general categories of active and passive treatment. Treatment methods are described in more detail in Appendix E, *Wastewater Treatment*.

7.5 Information Needs

Issues associated with acid drainage that should be analyzed and presented for NEPA disclosure and permitting include:

- Describe existing and proposed predictive testing that will be used to determine the

draft

potential for and neutralization of AMD (see Appendix C). Testing proposed throughout the mine's life should be described.

- Describe and predict the effectiveness of AMD prevention, moderation, or control measures. Present results of geochemical testing and treatability testing as well as modeling results.

- Describe QA/QC procedures during operations to ensure that acid-generating material is handled according to mine plan.

- Describe monitoring programs to confirm that AMD preventive and control measures are working and/or to provide early warning of any problems, including development of action levels and contingency plans.

draft

8.0 REFERENCES

Bell, A.V., Riley, M.D., and Yanful, E.G., 1994. Evaluation of a Composite Soil Cover to Control Acid Waste Rock Pile Drainage. *In: Proceedings of the International Land Reclamation and Mine Drainage Conference,* U.S. Bureau of Mines Publication SP-06B-94, p. 113-121.

Blowes, D.W., Reardon, E.J., Jambor, J.L., and Cherry, J.A., 1991. The Formation and Potential Importance of Cemented Layers in Inactive Sulfide Mine Tailings, *Geochimica Cosmochimica et Acta,* vol. 55, pp. 965-978.

Broughton, L.M. and Robertson, A.M., 1992. Acid Rock Drainage from Mines -- Where we are Now. *In:* Science Applications International Corporation, *Predicting Acid Generation from Non-Coal Mining Wastes: Notes of a 1992 Workshop,* Draft report prepared for the Environmental Monitoring Systems Laboratory, Office of Research and Development, U.S. Environmental Protection Agency, Las Vegas, NV, 19 pp.

Dave, N.K., 1993. *Panel Wetlands -- A Case History of Partially Submerged Pyritic Uranium Tailings under Water,* MEND Project Report 3.12.2, Ontario, Canada.

Dave, N.K. and Vivyurka, A.J., 1994. Water Cover on Acid Generating Uranium Tailings — Laboratory and Field Studies. *In: Proceedings of the International Land Reclamation and Mine Drainage Conference,* U.S. Bureau of Mines Publication SP-06A-94, p. 297-306.

Ellis, S. and Mellor, A., 1995. *Soils and Environment,* Routledge, New York, NY.

Environment Australia, 1997. *Managing Sulphidic Mine Wastes and Acid Drainage,* Best Practice Environmental Management in Mining, Commonwealth of Australia, May 1997, 81 pp.

Erickson, P.M., Kleinmann, R.L.P., and Onysko, S.J., 1985. *Control of Acid Mine Drainage by Application of Bactericidal Materials,* U.S. Bureau of Mines Information Circular, IC-9027, p. 25-34.

Fraser, W.W. and Robertson, J.D., 1994. Subaqueous Disposal of Reactive Mine Waste: An Overview and Update of Case Studies — MEND/Canada. *In: Proceedings of the International Land Reclamation and Mine Drainage Conference,* U.S. Bureau of Mines Publication SP-06A-94, p. 250-259.

Groupe De Recherche En Geologie de L'Ingenieur, 1991. *Acid Mine Drainage Generation from a Waste Rock Dump and Evaluation of Dry Covers Using Natural Materials: La Mine Doyon Case Study, Quebec,* Final report submitted to Service de la Technologie Miniere, Center de Recherches Minerales, 22 pp.

draft

Hutchinson, I.P.G. and Ellison, R.D., 1991. *Mine Waste Management,* California Mining Association, Sacramento.

Johnson, J.M., 1997. Tailings Disposal Design. *In:* Marcus, J.J., ed., *Mining Environmental Handbook, Effects of Mining on the Environment and American Environmental Controls on Mining,* Imperial College Press, London, pp. 428- 444.

Kent, A., 1997. Waste Rock Disposal Design. *In:* Marcus, J.J., ed., *Mining Environmental Handbook, Effects of Mining on the Environment and American Environmental Controls on Mining,* Imperial College Press, London, pp. 444-447.

Kim, A.G., Heisey, B.S., Kleinmann, R.L.P., and Deul, M., 1982. *Acid Mine Drainage: Control and Abatement Research,* U.S. Bureau of Mines Information Circular, IC-8905, 22 pp.

Kleinmann, R.L.P., Crerar, D.A., and Pacelli, R.R., 1981. Biogeochemistry of Acid Mine Drainage and a Method to Control Acid Formation, *Mining Engineering,* vol. 33, p. 300-305.

Levens, R.L., and Boldt, C.M.K., 1993. *Environmental Impacts of Mine Waste Sandfill,* U.S. Department of the Interior, Bureau of Mines, RI 9493.

Li, M.G., Jacob, C., and Comeau, G., 1996. Decommissioning of Sulphuric Acid-Leached Heap by Rinsing. *In: Tailings and Mine Waste '96,* Balkema, Rotterdam, pp. 295-304.

Mehling, P.E., Day, S.J., and Sexsmith, K.S., 1997. Blending and Layering Waste Rock to Delay, Mitigate or Prevent Acid Generation: A Case Study Review, *Proceedings of the Fourth International Conference on Acid Rock Drainage, Vancouver, B.C., May 31 - June 6, 1997,* pp. 951-969.

MEND, 1995. *Hydrology of Waste Rock Dumps,* Mine Environment Neutral Drainage Program Associate Project PA-1, Natural Resources Canada, Ottawa, ON, July 1995.

MEND, 1996. *Guide for Predicting Water Chemistry from Waste Rock Piles,* Mine Environment Neutral Drainage Program Report 1.27.1a, Natural Resources Canada, Ottawa, ON, July 1996.

Mining Engineering, 1998. Bedrock Shift Caused Spill in Spain, Industry Newswatch Column, *Mining Engineering,* vol. 50, no. 11, p. 23.

Munshower, F.F., 1997. Seeding and Planting. *In:* Marcus, J.J., ed., *Mining Environmental Handbook, Effects of Mining on the Environment and American Environmental Controls on Mining,* Imperial College Press, London, pp. 205-217.

draft

Nordstrom, D.K., Jenne, E.A., and Ball, J.W., 1979. Redox Equilibria of Iron in Acid Mine Waters. *In:* Jenne, E.A., ed., *Chemical Modeling in Aqueous Systems: Speciation, Sorption, Solubility, and Kinetics,* American Chemical Society Symposium Series, vol. 93, p. 51-79.

Norman, D.K. and Raforth, R.L., 1998. Innovations and Trends in Reclamation of Metal-Mine Tailings in Washington, *Washington Geology,* vol. 26, no. 2/3, pp. 29-42.

Parisi, D., Horneman, J., and Rastogi, V., 1994. Use of Bactericides to Control Acid Mine Drainage from Surface Operations. *In: Proceedings of the International Land Reclamation and Mine Drainage Conference,* U.S. Bureau of Mines Publication SP-06B-94, p. 319-325.

Peterson, G.A., Williams, S.E., and Moser, L.E., 1991. Inorganic Fertilizer Use and Its Effects on Semiarid and Arid Region Soils. *In:* Skujins, J., ed., *Semiarid Lands and Deserts, Soil Resource and Reclamation,* Marcel Dekker, Inc., New York, NY.

Price, W.A., 1997. *DRAFT Guidelines and Recommended Methods for the Prediction of Metal Leaching and Acid Rock Drainage at Minesites in British Columbia,* British Columbia Ministry of Employment and Investment, Energy and Minerals Division, Smithers, B.C., April, 1997, 143 pp.

Reeves, F.B. and Redente, E.F., 1991. The Importance of Mutualism in Succession. *In:* Skujins, J., ed., *Semiarid Lands and Deserts, Soil Resource and Reclamation,* Marcel Dekker, Inc., New York, NY.

Robertson, A.M. and Barton-Bridges, J., 1992. Cost Effective Methods of Long Term Acid Mine Drainage Control from Waste Rock Piles. *In:* Science Applications International Corporation, *Predicting Acid Generation from Non-Coal Mining Wastes: Notes of a 1992 Workshop,* Draft report prepared for the Environmental Monitoring Systems Laboratory, Office of Research and Development, U.S. Environmental Protection Agency, Las Vegas, NV, 22 pp.

Schroeder, P.R., Dozier, T.S., Zappi, P.A., McEnroe, B.M., Sjostrom, J.W., and Peyton, R.L., 1994. *The Hydrologic Evaluation of Landfill Performance (HELP) Model: Engineering Documentation for Version 3,* Office of Research and Development Report EPA/600/R-94/168b, U.S. Environmental Protection Agency, Washington, D.C., September 1994.

Scott, M.D., and Lo, R.C., 1992. Optimal Tailings Management at Highland Valley Copper,

draft

CIM Bulletin, July/August 1992, pp. 85-88.

Sengupta, M., 1993. *Environmental Impacts of Mining: Monitoring, Restoration, and Control,* Lewis Publishers, Boca Raton, FL.

Singer, P.C. and Stumm, W., 1970. Acid Mine Drainage: The Rate Determining Step, *Science,* vol. 167, p. 1121-1123.

Skousen, J.G. and Ziemkiewiscz, P.F., eds., 1996. *Acid Mine Drainage: Control and Treatment, 2nd edition,* National Mine Land Reclamation Center, Morgantown, WV, 362 pp.

Splittorf, D. and Rastogi, V., 1995. Ten Year Results from Bactericide-Treated and Reclaimed Mine Land, *Proceedings of the American Society for Surface Mining and Reclamation Annual Meeting,* Gillette, WY, p. 471-478.

Steffen, Robertson and Kirsten (B.C.), Inc., Norelco Environmental Consultants, and Gormely Process Engineering, (SRK et al.), 1989. *Draft Acid Rock Drainage Technical Guide,* British Columbia Acid Mine Drainage Task Force Report, BiTech Publishers, Ltd., Vancouver, B.C.

Steffen Robertson and Kirsten (SRK), 1992a. *Mine Rock Guidelines: Design and Control of Drainage Quality,* Saskatchewan Environment and Public Safety, Mines Pollution Control Branch Report #93301.

Steffen Robertson and Kirsten (SRK), 1992b. *Guidelines for Acid Mine Drainage Prediction in the North,* Indian and Northern Affairs Canada, Ottawa, ON.

U.S. Environmental Protection Agency (EPA), 1993a. *EPA Region VIII - NPDES Inspection Report, Landusky Mine,* May 11, 1993.

U.S. Environmental Protection Agency (EPA), 1993b. *EPA Region VIII - NPDES Inspection Report, Zortman Mine,* May 12, 1993.

U.S. Environmental Protection Agency (EPA), 1994a. *Technical Report: Design and Evaluation of Tailings Dams,* Office of Solid Waste, Report EPA 530-R-94-038, August 1994, 59 pp.

U.S. Environmental Protection Agency (EPA), 1994b. *Technical Report: Treatment of Cyanide Heap Leaches and Tailings,* Office of Solid Waste, Report EPA 530-R-94-037, September 1994, 62 pp.

draft

Vick, S.G., 1990. *Planning, Design, and Analysis of Tailings Dams,* BiTech Publishers, Vancouver, B.C., 369 pp.

Woodward-Clyde International-Americas, 1998. *Stibnite Area Site Characterization Report,* Report prepared for the Stibnite Area Site Characterization Voluntary Consent Order Respondents, August 3, 1998.

Yanful, E.G., Abbe, B.A., Woyshner, M., and St-Arnaud, L.C., 1994. Field and Laboratory Performance of Engineered Covers on the Waite Amulet Tailings. *In: Proceedings of the International Land Reclamation and Mine Drainage Conference,* U.S. Bureau of Mines Publication SP-06B-94, p. 138-147.

Ziemkiewiscz, P. and Skousen, J, 1996a. Overview of Acid Mine Drainage At-Source Control Strategies. *In:* J.G. Skousen and P.F. Ziemkiewiscz, eds., *Acid Mine Drainage: Control and Treatment, 2nd edition,* National Mine Land Reclamation Center, Morgantown, WV, p. 69-78.

Ziemkiewiscz, P. and Skousen, J, 1996b. Prevention of Acid Mine Drainage by Alkaline Addition. *In:* J.G. Skousen and P.F. Ziemkiewiscz, eds., *Acid Mine Drainage: Control and Treatment, 2nd edition,* National Mine Land Reclamation Center, Morgantown, WV, p. 79-90.

draft